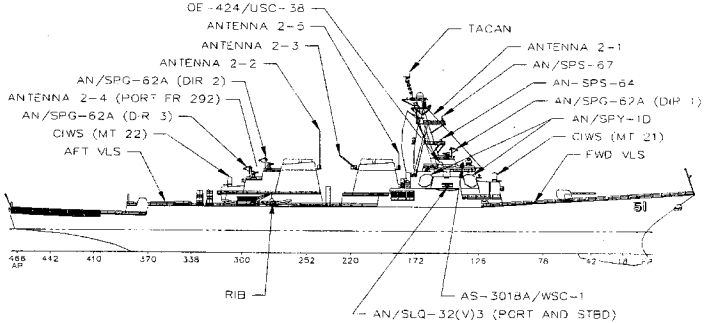

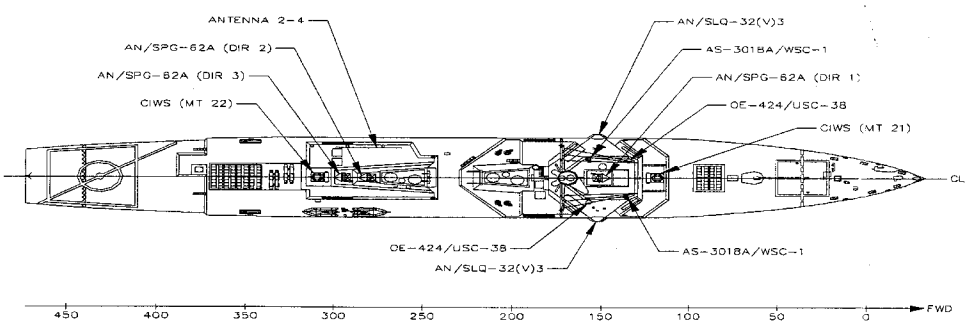

Figure 1. DDG 51 Class Flight I and II Profile and Plan Views