400 Seventh Street, S.W.
Washington, D.C. 20590

U.S. Department
of Transportation

**National Highway
Traffic Safety
Administration**

Dear Crash Data Researchers/Users:

Thank you for choosing crash data from the National Highway Traffic Safety Administration (NHTSA) for your research or other use. The information contained in this motor vehicle crash report is collected, maintained and distributed in accordance with Public Law 89-564. In accordance with this Public Law, NHTSA is required not to release any case information until completion of quality control procedures. These procedures include a review of the case material to extract all names, licenses and registration numbers, non-coded interview material, non-research related researcher comments in the margins, non-factual data, and the production number portion of the vehicle identification number (VIN).

If you requested NHTSA to query its database files in order to identify a specific crash, then that query was made using non-personal descriptors you provided for use in our search. This motor vehicle crash may have been identified from a data search and matches the general, non-personal descriptors you provided, but we cannot confirm that this is the specific crash report you requested.

If you have any questions with regard to the above procedures, please contact the Field Operations Branch, Crash Investigation Division, National Center for Statistics and Analysis at 202-366-4820. Again, please be advised that we cannot confirm that this is the case that you have specifically requested nor can we certify the information to be correct.

*** *** ***

Get it together!
SAFETY BELTS SAVE LIVES

AUTO SAFETY HOTLINE
(800) 424-9393
Wash. D.C. Area 366-0123

U.S. Department of Transportation
National Highway Traffic Safety Administration

CASE SUMMARY

NATIONAL ACCIDENT SAMPLING SYSTEM
CRASHWORTHINESS DATA SYSTEM

PSU 09 CASE NO. 506-A TYPE OF ACCIDENT CAR/CAR - SIDESWIPE ANGLE

A. DESCRIPTION OF THE ACCIDENT SEQUENCE AND ACCIDENT PECULIARITIES

(Provide a summary of the accident sequence as well as any particular event of the accident that is noteworthy. Injury mechanism and vehicle crashworthiness is the focus, not driver culpability. Do not include any personal identifiers. Use reverse side if needed.)

Vehicle's #1 and 2 were southbound county roadway. Vehicle #1 sideswipes vehicle #2 causing vehicle #2 to spin 180° and rest. Vehicle #1 proceeded to the right contacting the guardrail. While riding on the guardrail, the driver of vehicle #1's head is partially ejected. The driver's head makes contact to a utility pole behind the guardrail causing instant death.

B. VEHICLE PROFILE(S)

Vehicle No.	Class of Vehicle	Year/Make/Model	Most Severe Damage		Component Failure
			Damage Plane	Severity Description	
1	Compact	1992/TOYOTA/Camry	Front	Light	None
2	Compact	1989/CHEVROLET/ Beretta	Left	Unknown	None

C. PERSON PROFILE(S)

Vehicle No.	Person Role	Seat Position	Restraint Use	Most Severe Injury			
				Body Region	Lesion	AIS	Injury Source
1	Driver	Left Front	None	FATALLY	INJURED	DETAILS	UNKNOWN
2	Driver	Left Front	3 point automatic	NOT	INJURED		
2	Passenger	Right Front	3 point automatic	Knee	Contusion	1	Glovebox

DO NOT SANITIZE THIS FORM

HS Form 434A (1/92)

U.S. Department of Transportation
National Highway Traffic Safety Administration

NATIONAL ACCIDENT SAMPLING SYSTEM
CRASHWORTHINESS DATA SYSTEM

ACCIDENT COLLISION DIAGRAM

PSU No. 0 9

Case Number – Stratum 5 0 6 A

SCALE 1" = 20'

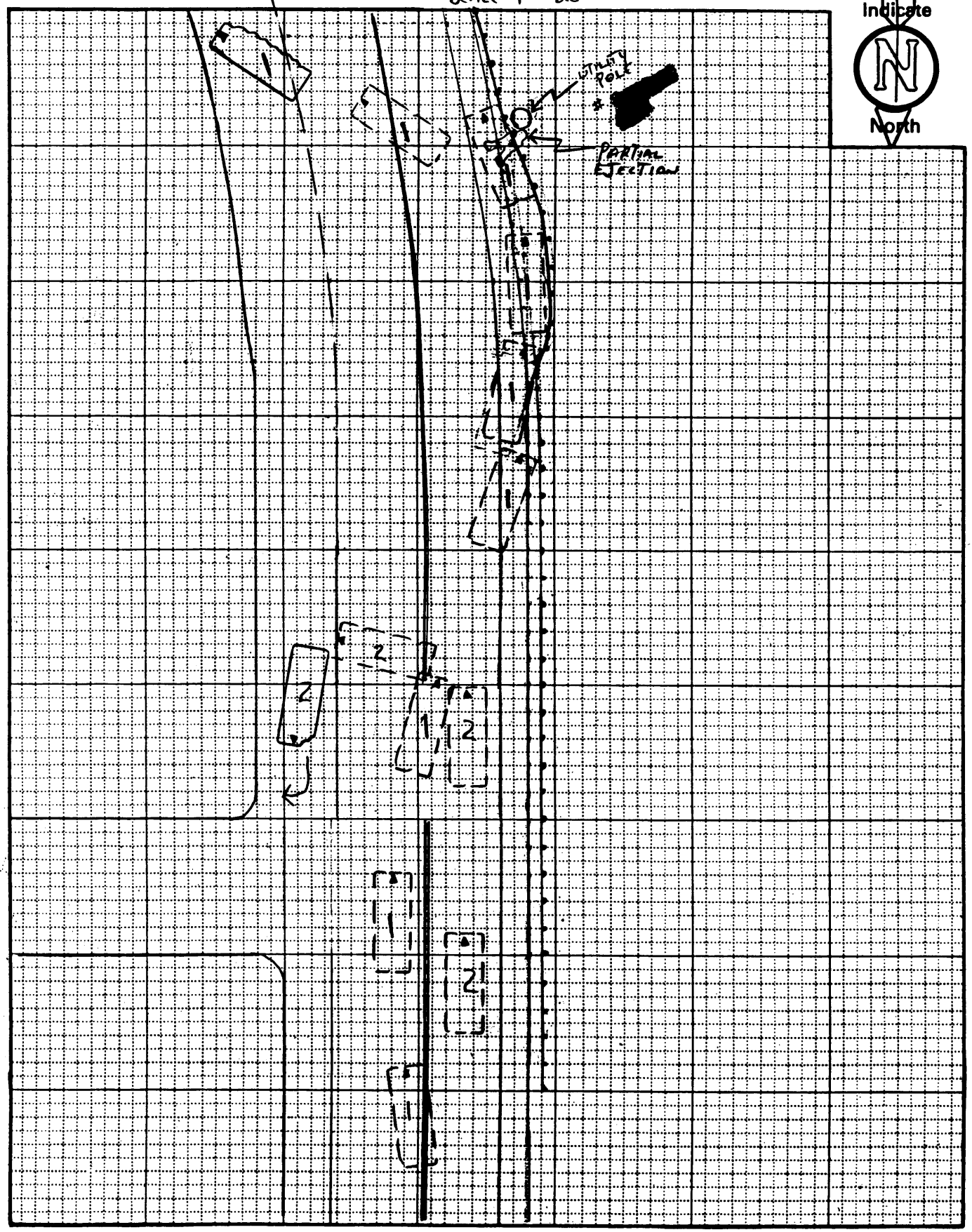

HS Form 431B (1/92)

U.S. Department of Transportation
National Highway Traffic Safety Administration

ACCIDENT COLLISION MEASUREMENT TABLE

NATIONAL ACCIDENT SAMPLING SYSTEM
CRASHWORTHINESS DATA SYSTEM

Primary Sampling Unit Number 0 9

Case Number—Stratum 5 0 6 A

ACCIDENT COLLISION DIAGRAM

LEVEL I
PHYSICAL EVIDENCE ABSENT

To be accomplished when there is no physical evidence present at the scene:

- approximate vehicle orientation at impact and final rest
- applicable road/roadway delineation (e.g., curbs/edge lines, lane markings, median markings, pavement markings, etc.)
- applicable traffic controls (e.g., speed limit)
- north arrow placed on diagram
- sketch required

LEVEL II
PHYSICAL EVIDENCE PRESENT

In addition to the level I tasks noted above, the following must be accomplished when

LEVEL II (Cont'd)

physical evidence is present:

- document reference point and reference line relative to physical features present at the scene
- scale documentation of all accident induced physical evidence
- scaled documentation of all roadside objects contacted
- roadway surface type and condition of applicable roadways
- grade measurements for all applicable roadways and at location of rollover initiation
- scaled representations of the vehicle(s) at pre-impact, impact, and final rest based upon either:
  - a) physical evidence, or
  - b) reconstructed accident dynamics

CRASH DATA

	VEH. #1	VEH. #2	VEH. #3
Heading Angle	195°	179°	
Surface Type	ASPHALT		
Surface Condition	DRY		
Grade (v/h) Measurement (between impact and final rest)	.008	.008	
Grade (v/h) Measurement (at location of rollover initiation)			

Reference Point: UTILITY POLE [redacted]

Reference line: STRAIGHT PORTION OF WHITE LIN

Item	Distance and Direction from Reference Point	Distance and Direction from Reference Line
POLE	0	3"
BEND STARTS ON GAURDRAIL	35°	6°
GAURDRAIL STARTS	143°	6°

HS Form 431A (1/92)

Item	Distance and Direction from Reference Point	Distance and Direction from Reference Line

U.S. Department of Transportation
National Highway Traffic Safety Administration

ACCIDENT FORM

NATIONAL ACCIDENT SAMPLING SYSTEM
CRASHWORTHINESS DATA SYSTEM

1. Primary Sampling Unit Number 0 9
2. Case Number - Stratum 5 0 6 A

IDENTIFICATION

3. Number of General Vehicle Forms Submitted 0 2
4. Date of Accident (Month,Day,Year) [redacted] / [redacted] / 9 2
5. Time of Accident 0 1 3 0

Code reported military time of accident.

NOTE: Midnight = 2400
Unknown = 9999

SPECIAL STUDIES - INDICATORS

Check (✓) each special study (SS12-SS16 below) that has been completed; code 1 for the checked special studies and 0 for the special studies not checked.

6. ___ SS12 Not Active 0
7. ___ SS13 Not Active 0
8. ___ SS14 Fatal AOPS 1
9. ___ SS15 _____ 0
10. ___ SS16 _____ 0

NUMBER OF EVENTS

11. Number of Recorded Events in This Accident 0 2

Code the number of events which occurred in this accident.

ACCIDENT EVENTS

For each event that occurred in the accident, code the lowest numbered vehicle in the left columns and the other involved vehicle or object on the right.

Accident Event Sequence Number	Vehicle Number	Class Of Vehicle	General Area of Damage	Vehicle Number or Object Contacted	Class Of Vehicle	General Area of Damage
12. 0 1	13. 0 1	14. 0 2	15. F	16. 0 2	17. 0 2	18. L
19. 0 2	20. 0 1	21. 0 2	22. FR	23. 5 6	24. 0 0	25. 0
26. 0 3	27.	28.	29.	30.	31.	32.
33. 0 4	34.	35.	36.	37.	38.	39.
40. 0 5	41.	42.	43.	44.	45.	46.

IF GREATER THAN FIVE EVENTS, CONTINUE CODING ON THE ACCIDENT EVENT SUPPLEMENT

CODES FOR CLASS OF VEHICLE

(00) Not a motor vehicle
(01) Subcompact/mini (wheelbase < 100 inches)
(02) Compact (wheelbase = 100 — 104 inches)
(03) Intermediate (wheelbase = 105 — 109 inches)
(04) Full size (wheelbase = 110 — 114 inches)
(05) Largest (wheelbase ≥ 115 inches)
(09) Unknown passenger car size
(11) Compact utility vehicle
(12) Large utility vehicle (≤ 10,000 lbs GVWR)
(13) Passenger van (≤ 10,000 lbs GVWR)
(14) Other van (≤ 10,000 lbs GVWR)
(15) Pickup truck (≤ 10,000 lbs GVWR)
(18) Other truck (≤ 10,000 lbs GVWR)
(19) Unknown light truck type
(20) School bus
(21) Other bus
(22) Truck (> 10,000 lbs GVWR)
(23) Tractor without trailer
(24) Tractor-trailer(s)
(25) Motored cycle
(28) Other vehicle
(99) Unknown

CODES FOR GENERAL AREA OF DAMAGE (GAD)

CDS APPLICABLE AND OTHER VEHICLES

(0) Not a motor vehicle
(N) Noncollision
(F) Front
(R) Right side
(L) Left side
(B) Back
(T) Top
(U) Undercarriage
(9) Unknown

TDC APPLICABLE VEHICLES

(0) Not a motor vehicle
(N) Noncollision
(F) Front
(R) Right side
(L) Left side
(B) Back of unit with cargo area (rear of trailer or straight truck)
(D) Back (rear of tractor)
(C) Rear of cab
(V) Front of cargo area
(T) Top
(U) Undercarriage
(9) Unknown

CODES FOR VEHICLE NUMBER OR OBJECT CONTACTED

(01-30) — Vehicle Number

Noncollision
(31) Overturn — rollover
(32) Fire or explosion
(33) Jackknife
(34) Other intraunit damage (specify): _____
(35) Noncollision injury
(38) Other noncollision (specify): _____
(39) Noncollision — details unknown

Collision With Fixed Object
(41) Tree (≤ 4 inches in diameter)
(42) Tree (> 4 inches in diameter)
(43) Shrubbery or bush
(44) Embankment
(45) Breakaway pole or post (any diameter)

Nonbreakaway Pole or Post
(50) Pole or post (≤ 4 inches in diameter)
(51) Pole or post (> 4 inches but ≤ 12 inches in diameter)
(52) Pole or post (> 12 inches in diameter)
(53) Pole or post (diameter unknown)
(54) Concrete traffic barrier
(55) Impact attenuator
(56) Other traffic barrier (includes guardrail) (specify): _____
(57) Fence
(58) Wall
(59) Building
(60) Ditch or culvert
(61) Ground
(62) Fire hydrant
(63) Curb
(64) Bridge
(68) Other fixed object (specify): _____
(69) Unknown fixed object

Collision with Nonfixed Object
(71) Motor vehicle not in-transport
(72) Pedestrian
(73) Cyclist or cycle
(74) Other nonmotorist or conveyance _____
(75) Vehicle occupant
(76) Animal
(77) Train
(78) Trailer, disconnected in transport
(88) Other nonfixed object (specify): _____
(89) Unknown nonfixed object

(98) Other event (specify): _____
(99) Unknown event or object

04-506A

OCCUPANT RELATED

16. Driver Presence in Vehicle 1
(0) Driver not present
(1) Driver present
(9) Unknown

17. Number of Occupants This Vehicle 0 1
(00-96) Code actual number of occupants for this vehicle
(97) 97 or more
(99) Unknown

18. Number of Occupant Forms Submitted 0 1

VEHICLE WEIGHT ITEMS

19. Vehicle Curb Weight 0 2, 9 00
2943 Code weight to nearest 100 pounds.
(010) Less than 1050 pounds
(135) 13,500 pounds or more
(999) Unknown

Source: [redacted]

20. Vehicle Cargo Weight 0, 0 00
____ Code weight to nearest 100 pounds.
(00) Less than 50 pounds
(97) 9,650 pounds or more
(99) Unknown

RECONSTRUCTION DATA

21. Towed Trailing Unit 0
(0) No towed unit
(1) Yes—towed trailing unit
(9) Unknown

22. Documentation of Trajectory Data for This Vehicle 0 X
(0) No
(1) Yes
final not unknown
NASS CODING CHANGE
1st Review: 1A
2nd Review: ____

23. Post Collision Condition of Tree or Pole (For Highest Delta V) 0
(0) Not collision (for highest delta V) with tree or pole
(1) Not damaged
(2) Cracked/sheared
(3) Tilted <45 degrees
(4) Tilted ≥45 degrees
(5) Uprooted tree
(6) Separated pole from base
(7) Pole replaced
(8) Other (specify): ____
(9) Unknown

24. Rollover 0
(0) No rollover (no overturning)

Rollover (primarily about the longitudinal axis)
(1) Rollover, 1 quarter turn only
(2) Rollover, 2 quarter turns
(3) Rollover, 3 quarter turns
(4) Rollover, 4 or more quarter turns (specify): ____

(5) Rollover--end-over-end (i.e., primarily about the lateral axis)
(9) Rollover (overturn), details unknown

OVERRIDE/UNDERRIDE (THIS VEHICLE)

25. Front Override/Underride (this Vehicle) 0

26. Rear Override/Underride (this Vehicle) 0

(0) No override/underride, or not an end-to-end impact

Override (see specific CDC)
(1) 1st CDC
(2) 2nd CDC
(3) Other not automated CDC (specify): ____

Underride (see specific CDC)
(4) 1st CDC
(5) 2nd CDC
(6) Other not automated CDC (specify): ____

(7) Medium/heavy truck or bus override
(9) Unknown

HEADING ANGLE AT IMPACT FOR HIGHEST DELTA V

Values: (000)-(359) Code actual value
(997) Noncollision
(998) Impact with object
(999) Unknown

27. Heading Angle For This Vehicle 9 9 8

28. Heading Angle For Other Vehicle 9 9 8

PSU 09-506A V-01.

Category	Configuration	ACCIDENT TYPES (Includes Intent)				
I. Single Driver	A. Right Roadside Departure	01 DRIVE OFF ROAD	02 CONTROL/ TRACTION LOSS	03 AVOID COLLISION WITH VEH., PED., ANIM.	04 SPECIFICS OTHER	05 SPECIFICS UNKNOWN
	B. Left Roadside Departure	06 DRIVE OFF ROAD	07 CONTROL/ TRACTION LOSS	08 AVOID COLLISION WITH VEH., PED., ANIM.	09 SPECIFICS OTHER	10 SPECIFICS UNKNOWN
	C. Forward Impact	11 PARKED VEH.	12 STA. OBJECT	13 PEDESTRIAN/ ANIMAL	14 END DEPARTURE	15 SPECIFICS OTHER / 16 SPECIFICS UNKNOWN
II. Same Trafficway Same Direction	D. Rear-End	20 STOPPED 21, 22, 23	24 SLOWER 25, 26, 27	28 DECEL. 29, 30, 31	(EACH • 32) SPECIFICS OTHER	(EACH • 33) SPECIFICS UNKNOWN
	E. Forward Impact	34 CONTROL/ TRACTION LOSS	36 CONTROL/ TRACTION LOSS	38 AVOID COLLISION WITH VEH.	40 AVOID COLLISION WITH OBJECT	(EACH • 42) SPECIFICS OTHER / (EACH • 43) SPECIFICS UNKNOWN
	F. Sideswipe Angle	44, 45, 46, 47			(EACH • 48) SPECIFICS OTHER	(EACH • 49) SPECIFICS UNKNOWN
III. Same Trafficway Opposite Direction	G. Head-On	50, 51 LATERAL MOVE			(EACH • 52) SPECIFICS OTHER	(EACH • 53) SPECIFICS UNKNOWN
	H. Forward Impact	54 CONTROL/ TRACTION LOSS	56 CONTROL/ TRACTION LOSS	58 AVOID COLLISION WITH VEH.	60 AVOID COLLISION WITH OBJECT	(EACH • 62) SPECIFICS OTHER / (EACH • 63) SPECIFICS UNKNOWN
	I. Sideswipe/ Angle	64, 65 LATERAL MOVE			(EACH • 66) SPECIFICS OTHER	(EACH • 67) SPECIFICS UNKNOWN
IV. Change Trafficway Vehicle Turning	J. Turn Across Path	68, 69 INITIAL OPPOSITE DIRECTIONS	70, 71 INITIAL SAME DIRECTIONS	72, 73	(EACH • 74) SPECIFICS OTHER	(EACH • 75) SPECIFICS UNKNOWN
	K. Turn Into Path	76, 77 TURN INTO SAME DIRECTION	78, 79	80, 81 TURN INTO OPPOSITE DIRECTIONS	82, 83	(EACH • 84) SPECIFICS OTHER / (EACH • 85) SPECIFICS UNKNOWN
V. Intersecting Paths (Vehicle Damage)	L. Straight Paths	86, 87	88, 89		(EACH • 90) SPECIFICS OTHER	(EACH • 91) SPECIFICS UNKNOWN
VI. Miscellaneous	M. Backing Etc.	92 BACKING VEH.	93 OTHER VEH. OR OBJECT		98 Other Accident Type 99 Unknown Accident Type 00 No Impact	

OTHER DATA

56. Driver's Zip Code [redacted]

(00000) Driver not present
(00001) Driver not a resident of U.S. or territories
_____ Code actual 5-digit zip code
(99999) Unknown

57. Driver's Race/Ethnic Origin 2
(0) Driver not present
(1) White (non-Hispanic)
(2) Black (non-Hispanic)
(3) White (Hispanic)
(4) Black (Hispanic)
(5) American Indian, Eskimo or Aleut
(6) Asian or Pacific Islander
(8) Other (specify): _____
(9) Unknown

58. Vehicle Special Use (This Trip) 0
(0) No special use
(1) Taxi
(2) Vehicle used as school bus
(3) Vehicle used as other bus
(4) Military
(5) Police
(6) Ambulance
(7) Hearse
(8) Fire truck or car
(9) Unknown

ROLLOVER DATA

If GV07 (Body Type) ≠ 1-49, leave GV59-GV63 blank.
If GV24 (Rollover) = 0, then GV59-GV63 must equal 0.
If GV24 = 9, then GV59-GV63 must equal 9.

59. Rollover Initiation Type 0
(0) No rollover
(1) Trip-over
(2) Flip-over
(3) Turn-over
(4) Climb-over
(5) Fall-over
(6) Bounce-over
(7) Collision with another vehicle
(8) Other rollover initiation type specify): _____
(9) Unknown rollover initiation type

60. Location of Rollover Initiation 0
(0) No rollover
(1) On roadway
(2) On shoulder—paved
(3) On shoulder—unpaved
(4) On roadside or divided trafficway median
(9) Unknown

61. Rollover Initiation Object Contacted 0 0

62. Location on Vehicle Where Initial Principal Tripping Force Is Applied 0
(0) No rollover
(1) Wheels/tires
(2) Side plane
(3) End plane
(4) Undercarriage
(5) Other location on vehicle (specify): _____
(8) Non-contact rollover forces (specify): _____
(9) Unknown

63. Direction of Initial Roll 0
(0) No rollover
(1) Roll right - primarily about the longitudinal axis
(2) Roll left - primarily about the longitudinal axis
(5) End-over-end (i.e., primarily about the lateral axis)
(9) Unknown roll direction

PRECRASH DATA

64. Pre-Event Movement (Prior to Recognition of Critical Event) ~~14~~ 05
NASS CODING CHANGE
1st Review: 1A
2nd Review:
(01) Going straight
(02) Slowing or stopping in traffic lane
(03) Starting in traffic lane
(04) Stopped in traffic lane
(05) Passing or overtaking another vehicle
(06) Disabled or parked in travel lane
(07) Leaving a parking position
(08) Entering a parking position
(09) Turning right
(10) Turning left
(11) Making a U-turn
(12) Backing up (other than for parking position)
(13) Negotiating a curve
(14) Changing lanes
(15) Merging
(16) Successful avoidance maneuver to a previous critical event
(97) Other (specify): _____
(98) No driver present
(99) Unknown

PSU 09-506A V-01

CODES FOR ROLLOVER INITIATION OBJECT CONTACTED

(00) No rollover
(01-30) — Vehicle Number

Noncollision
(31) Turn-over — fall-over
(33) Jackknife

Collision With Fixed Object
(41) Tree (≤ 4 inches in diameter)
(42) Tree (> 4 inches in diameter)
(43) Shrubbery or bush
(44) Embankment

(45) Breakaway pole or post (any diameter)

Nonbreakaway Pole or Post
(50) Pole or post (≤ 4 inches in diameter)
(51) Pole or post (> 4 inches but ≤ 12 inches in diameter)
(52) Pole or post (> 12 inches in diameter)
(53) Pole or post (diameter unknown)

(54) Concrete traffic barrier
(55) Impact attenuator
(56) Other traffic barrier (includes guardrail) (specify):_____

(57) Fence
(58) Wall
(59) Building
(60) Ditch or culvert
(61) Ground
(62) Fire hydrant
(63) Curb
(64) Bridge
(68) Other fixed object (specify):
_____

(69) Unknown fixed object

Collision with Nonfixed Object
(71) Motor vehicle not in-transport
(76) Animal
(77) Train
(78) Trailer, disconnected in transport
(88) Other nonfixed object (specify):
_____

(89) Unknown nonfixed object

(98) Other event (specify):
_____

(99) Unknown event or object

U.S. Department of Transportation
National Highway Traffic Safety Administration

EXTERIOR VEHICLE FORM

NATIONAL ACCIDENT SAMPLING SYSTEM
CRASHWORTHINESS DATA SYSTEM

1. Primary Sampling Unit Number 0 9
2. Case Number - Stratum 5 0 6 A
3. Vehicle Number [redacted] 93 1300HR 0 1

VEHICLE IDENTIFICATION

VIN 4 T 1 S K 1 2 E 5 N U [redacted] Model Year 9 2

Vehicle Make (specify): TOYOTA Vehicle Model (specify): CAMRY

LOCATOR

Locate the end of the damage with respect to the vehicle longitudinal center line or bumper corner for end impacts or an undamaged axle for side impacts.

Specific Impact No.	Location of Direct Damage	Location of Field L
1	FRONT START (R) BC EXTENDS 5.0' THRU (L) BC	FRT BC TO BC

CRUSH PROFILE

NOTES: Identify the plane at which the C-measurements are taken (e.g., at bumper, above bumper, at sill, above sill, etc.) and label adjustments (e.g., free space).

Measure and document on the vehicle diagram the location of maximum crush.

Measure C1 to C6 from driver to passenger side in front or rear impacts and rear to front in side impacts.

Free space value is defined as the distance between the baseline and the original body contour taken at the individual C locations. This may include the following: bumper lead, bumper taper, side protrusion, side taper, etc. Record the value for each C-measurement and maximum crush.

Use as many lines/columns as necessary to describe each damage profile.

Specific Impact Number	Plane of Impact C-Measurements	Direct Damage Width (CDC)	Direct Damage Max Crush	Field L	C_1	C_2	C_3	C_4	C_5	C_6	±D
1	BUMPER	5.0	C_6	56.0	5.3	1.0	0	0	1.8	7.7	*27.0
	FB				5.3	1.0	0	0	1.0	5.3	
	RESULT				0	0	0	0	.8	2.4	

HS Form 435A (Rev. 1/92)

09-506A

V1

VEHICLE DAMAGE SKETCH

TIRE – WHEEL DAMAGE

a. Rotation physically restricted		b. Tire deflated	
RF	1	RF	1
LF	2	LF	2
RR	2	RR	2
LR	2	LR	2

(1) Yes (2) No (8) NA (9) Unk.

TYPE OF TRANSMISSION

☐ Manual ☒ Automatic

ORIGINAL SPECIFICATIONS

Wheelbase	103.1
Overall Length	187.8
Maximum Width	69.7
Curb Weight	2943
Average Track	60.0
Front Overhang	37.7
Rear Overhang	47.0
Engine Size: cyl./ displ.	I4
Undeformed End Width	59.0

WHEEL STEER ANGLES
(For locked front wheels or displaced rear axles only)

RF ± ___ ___ °
LF ± ___ ___ °
RR ± ___ ___ °
LR ± ___ ___ °

Within ±5 degrees

DRIVE WHEELS

☒ FWD ☐ RWD ☐ 4WD

Approximate Cargo Weight ϕ

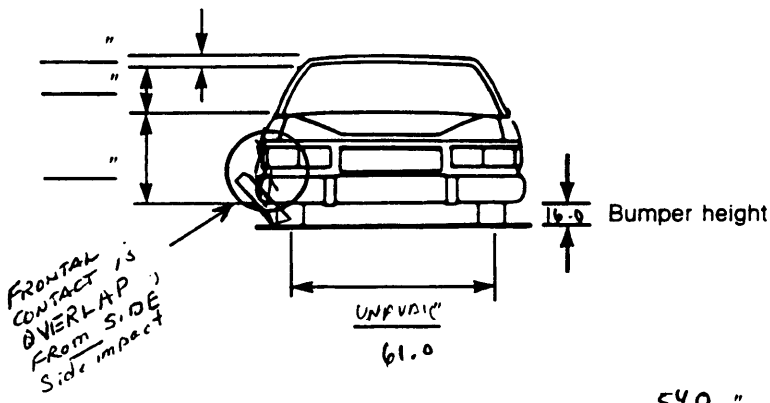

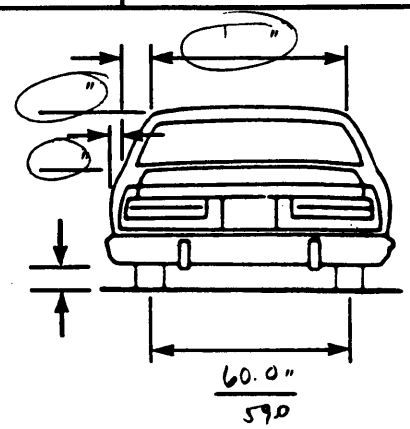

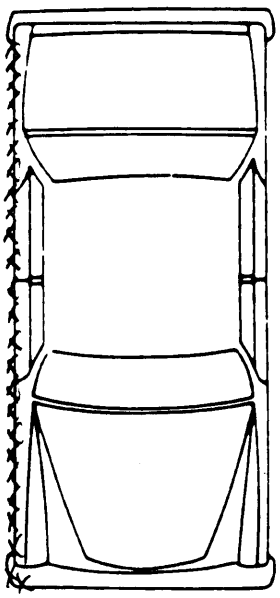

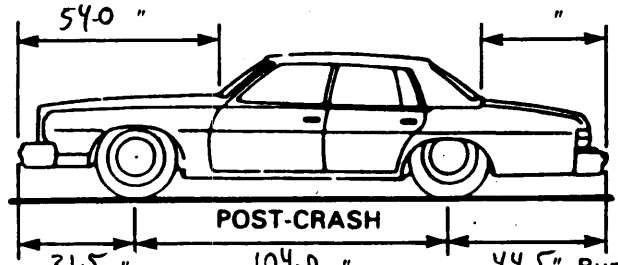

Bumper corner 31.5 " 104.0 " 44.5" Bumper corner
Stringline 36.8" 151.0 47.0 " Stringline

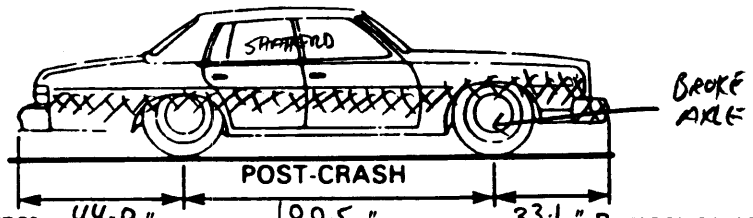

Bumper corner 44.0" 100.5 " 33.1 " Bumper corner
Stringline 46.5 " 147.0 40.8" Stringline

NOTES: Sketch new perimeter and cross hatch direct damage and single hatch induced damage on all views. Annotate observations which might be useful in reconstructing the accident (e.g., grass in tire bead, direction of striations, scuff on sidewall, etc.). If pulling trailer, sketch type of trailer and damage received on the back of this page.
Annotate any damage caused by extrication such as component removal by torching, prying, or hydraulic shears.

CDC WORKSHEET

CODES FOR OBJECT CONTACTED

(01-30) — Vehicle Number

Noncollision
- (31) Overturn — rollover
- (32) Fire or explosion
- (33) Jackknife
- (34) Other intraunit damage (specify): _____
- (35) Noncollision injury
- (38) Other noncollision (specify): _____
- (39) Noncollision — details unknown

Collision With Fixed Object
- (41) Tree (≤ 4 inches in diameter)
- (42) Tree (> 4 inches in diameter)
- (43) Shrubbery or bush
- (44) Embankment
- (45) Breakaway pole or post (any diameter)

Nonbreakaway Pole or Post
- (50) Pole or post (≤ 4 inches in diameter)
- (51) Pole or post (> 4 inches but ≤ 12 inches in diameter)
- (52) Pole or post (> 12 inches in diameter)
- (53) Pole or post (diameter unknown)
- (54) Concrete traffic barrier
- (55) Impact attenuator
- (56) Other traffic barrier (includes guardrail) (specify): _____
- (57) Fence
- (58) Wall
- (59) Building
- (60) Ditch or culvert
- (61) Ground
- (62) Fire hydrant
- (63) Curb
- (64) Bridge
- (68) Other fixed object (specify): _____
- (69) Unknown fixed object

Collision with Nonfixed Object
- (71) Motor vehicle not in-transport
- (72) Pedestrian
- (73) Cyclist or cycle
- (74) Other nonmotorist or conveyance _____
- (75) Vehicle occupant
- (76) Animal
- (77) Train
- (78) Trailer, disconnected in transport
- (88) Other nonfixed object (specify): _____
- (89) Unknown nonfixed object
- (98) Other event (specify): _____
- (99) Unknown event or object

DEFORMATION CLASSIFICATION BY EVENT NUMBER

Accident Event Sequence Number	Object Contacted	(1) (2) Direction of Force (degrees)	Incremental Value of Shift	(3) Deformation Location	(4) Specific Longitudinal or Lateral Location	(5) Specific Vertical or Lateral Location	(6) Type of Damage Distribution	(7) Deformation Extent
01	02	999	00	9	9	9	9	99
2	56	10 o'clock 3 0	00	F	R	E	E	09

U.S. Department of Transportation
National Highway Traffic Safety Administration

INTERIOR VEHICLE FORM

NATIONAL ACCIDENT SAMPLING SYSTEM
CRASHWORTHINESS DATA SYSTEM

1. Primary Sampling Unit Number 0 9
2. Case Number - Stratum 5 0 6 A
3. Vehicle Number 0 1

INTEGRITY

4. Passenger Compartment Integrity 0 6

(00) No integrity loss

Yes, Integrity Was Lost Through
(01) Windshield
(02) Door (side)
(03) Door/hatch (back door)
(04) Roof
(05) Roof glass
(06) Side window
(07) Rear window (backlight)
(08) Roof and roof glass
(09) Windshield and door (side)
(10) Windshield and roof
(11) Side and rear window (side window and backlight)
(12) Windshield and side window
(13) Door and side window
(98) Other combination of above (specify): _____
(99) Unknown

Door, Tailgate or Hatch Opening

5. LF 1 6. RF 1 7. LR 1 8. RR 1 9. TG/H 0

(0) No door/gate/hatch
(1) Door/gate/hatch remained closed and operational
(2) Door/gate/hatch came open during collision
(3) Door/gate/hatch jammed shut
(8) Other (specify): _____
(9) Unknown

Damage/Failure Associated with Door, Tailgate or Hatch Opening in Collision. If IV05-IV09 ≠ 2, Then code Ø

10. LF 0 11. RF 0 12. LR 0 13. RR 0 14. TG/H 0

(0) No door/gate/hatch or door not opened

Door, Tailgate or Hatch Came Open During Collision
(1) Door operational (no damage)
(2) Latch/striker failure due to damage
(3) Hinge failure due to damage
(4) Door structure failure due to damage
(5) Door support (i.e., pillar, sill, roof side rail, etc.) failure due to damage
(6) Latch/striker and hinge failure due to damage
(8) Other failure (specify): _____
(9) Unknown

GLAZING

Glazing Damage from Impact Forces

15. WS 0 16. LF 0 17. RF 0 18. LR 0 19. RR 0
20. BL 0 21. Roof 8 22. Other 0

(0) No glazing damage from impact forces
(2) Glazing in place and cracked from impact forces
(3) Glazing in place and holed from impact forces
(4) Glazing out-of-place (cracked or not) and not holed from impact forces
(5) Glazing out-of-place and holed from impact forces
(6) Glazing disintegrated from impact forces
(7) Glazing removed prior to accident
(8) No glazing
(9) Unknown if damaged

Broken when Occ #15 head was snapped backward

Glazing Damage from Occupant Contact

23. WS 0 24. LF 0 25. RF 6 26. LR 0 27. RR 6
28. BL 0 29. Roof 0 30. Other 0

(0) No occupant contact to glazing or no glazing
(1) Glazing contacted by occupant but no glazing damage
(2) Glazing in place and cracked by occupant contact
(3) Glazing in place and holed by occupant contact
(4) Glazing out-of-place (cracked or not) by occupant contact and not holed by occupant contact
(5) Glazing out-of-place by occupant contact and holed by occupant contact
(6) Glazing disintegrated by occupant contact
(9) Unknown if contacted by occupant

If No Glazing Damage *And* No Occupant Contact or No Glazing, Then Code IV31 Through IV46 As Ø

Type of Window/Windshield Glazing

31. WS 0 32. LF 0 33. RF 2 34. LR 0 35. RR 2
36. BL 0 37. Roof 0 38. Other 0

(0) No glazing contact and no damage, or no glazing
(1) AS-1 — Laminated
(2) AS-2 — Tempered
(3) AS-3 — Tempered-tinted
(4) AS-14 — Glass/Plastic
(8) Other (specify): _____
(9) Unknown

Window Precrash Glazing Status

39. WS 0 40. LF 0 41. RF 2 42. LR 0 43. RR 2
44. BL 0 45. Roof 0 46. Other 0

(0) No glazing contact and no damage, or no glazing
(1) Fixed
(2) Closed
(3) Partially opened
(4) Fully opened
(9) Unknown

INTRUSION WORKSHEET

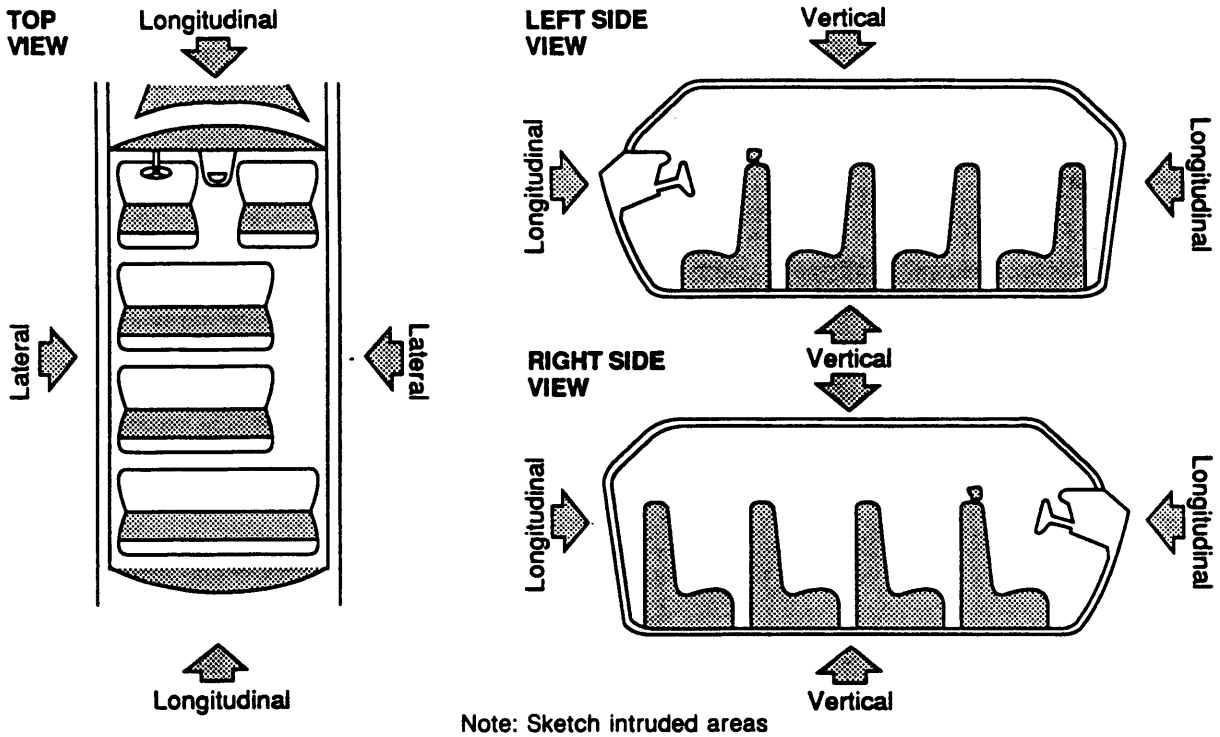

Note: Sketch intruded areas

LOCATION OF INTRUSION	INTRUDED COMPONENT	COMPARISON VALUE	–	INTRUDED VALUE	=	INTRUSION	DOMINANT CRUSH DIRECTION
			–		=		
			–		=		
			–		=		
			–		=		
			–		=		
			–		=		
			–		=		
			–		=		
			–		=		
			–		=		
			–		=		
			–		=		
			–		=		
			–		=		
			–		=		
			–		=		

Document no more than the 15 most severe intrusions

OCCUPANT AREA INTRUSION

Note: If no intrusions, leave variables IV47-IV86 blank.

	Location of Intrusion	Intruding Component	Magnitude of Intrusion	Dominant Crush Direction
1st	47.___ ___	48.___ ___	49.___	50.___
2nd	51.___ ___	52.___ ___	53.___	54.___
3rd	55.___ ___	56.___ ___	57.___	58.___
4th	59.___ ___	60.___ ___	61.___	62.___
5th	63.___ ___	64.___ ___	65.___	66.___
6th	67.___ ___	68.___ ___	69.___	70.___
7th	71.___ ___	72.___ ___	73.___	74.___
8th	75.___ ___	76.___ ___	77.___	78.___
9th	79.___ ___	80.___ ___	81.___	82.___
10th	83.___ ___	84.___ ___	85.___	86.___

None

LOCATION OF INTRUSION

Front Seat
- (11) Left
- (12) Middle
- (13) Right

Second Seat
- (21) Left
- (22) Middle
- (23) Right

Third Seat
- (31) Left
- (32) Middle
- (33) Right

Fourth Seat
- (41) Left
- (42) Middle
- (43) Right

(97) Catastrophic
(98) Other enclosed area (specify) _____
(99) Unknown

INTRUDING COMPONENT

Interior Components
- (01) Steering assembly
- (02) Instrument panel left
- (03) Instrument panel center
- (04) Instrument panel right
- (05) Toe pan
- (06) A-pillar
- (07) B-pillar
- (08) C-pillar
- (09) D-pillar
- (10) Door panel (side)
- (12) Roof (or convertible top)
- (13) Roof side rail
- (14) Windshield
- (15) Windshield header
- (16) Window frame
- (17) Floor pan (includes sill)
- (18) Backlight header
- (19) Front seat back
- (20) Second seat back
- (21) Third seat back
- (22) Fourth seat back
- (23) Fifth seat back
- (24) Seat cushion
- (25) Back door/panel (e.g., tailgate)
- (26) Other interior component (specify): _____
- (27) Side panel - forward of the A-pillar
- (28) Side panel - rear of the A-pillar

Exterior Components
- (30) Hood
- (31) Outside surface of this vehicle (specify): _____
- (32) Other exterior object in the environment (specify): _____
- (33) Unknown exterior object
- (97) Catastrophic
- (98) Intrusion of unlisted component(s) (specify): _____
- (99) Unknown

MAGNITUDE OF INTRUSION

- (1) ≥ 1 inch but < 3 inches
- (2) ≥ 3 inches but < 6 inches
- (3) ≥ 6 inches but < 12 inches
- (4) ≥ 12 inches but < 18 inches
- (5) ≥ 18 inches but < 24 inches
- (6) ≥ 24 inches
- (7) Catastrophic
- (9) Unknown

DOMINANT CRUSH DIRECTION

- (1) Vertical
- (2) Longitudinal
- (3) Lateral
- (7) Catastrophic
- (9) Unknown

STEERING RIM/SPOKE DEFORMATION

COMPARISON VALUE	—	DAMAGE VALUE	=	DEFORMATION
	—		=	
	—		=	
	—		=	
	—		=	

None

STEERING COLUMN

87. Steering Column Type 2
(1) Fixed column
(2) Tilt column
(3) Telescoping column
(4) Tilt and telescoping column
(8) Other column type (specify): _____
(9) Unknown

88. Blank X X
(This variable is left blank so that numbering consistency can be maintained with the 1988-91 CDS.

89. Blank X X X
(This variable is left blank so that numbering consistency can be maintained with the 1988-91 CDS.

90. Blank X X X
(This variable is left blank so that numbering consistency can be maintained with the 1988-91 CDS.

91. Blank X X X
(This variable is left blank so that numbering consistency can be maintained with the 1988-91 CDS.

92. Steering Rim/Spoke Deformation 0
____Code actual measured deformation to the nearest inch.
(0) No steering rim deformation
(1-5) Actual measured value
(6) 6 inches or more
(8) Observed deformation cannot be measured
(9) Unknown

93. Location of Steering Rim/Spoke Deformation 0 0
(00) No steering rim deformation

Quarter Sections
(01) Section A
(02) Section B
(03) Section C
(04) Section D

Half Sections
(05) Upper half of rim/spoke
(06) Lower half of rim/spoke
(07) Left half of rim/spoke
(08) Right half of rim/spoke

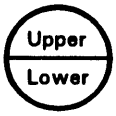

(09) Complete steering wheel collapse
(10) Undetermined location
(99) Unknown

INSTRUMENT PANEL

94. Odometer Reading 0 1 5 ,000
015111 miles—Code mileage to the nearest 1,000 miles
(000) No odometer
(001) Less than 1,500 miles
(300) 299,500 miles or more
(999) Unknown

Source: [redacted]

95. Instrument Panel Damage from Occupant Contact? 1
(0) No
(1) Yes
(9) Unknown

96. Knee Bolsters Deformed from Occupant Contact? 8
(0) No
(1) Yes
(8) Not present
(9) Unknown

97. Did Glove Compartment Door Open During Collision(s)? 0
(0) No
(1) Yes
(8) Not present
(9) Unknown

VEHICLE INTERIOR SKETCHES

Note area of ejection/entrapment

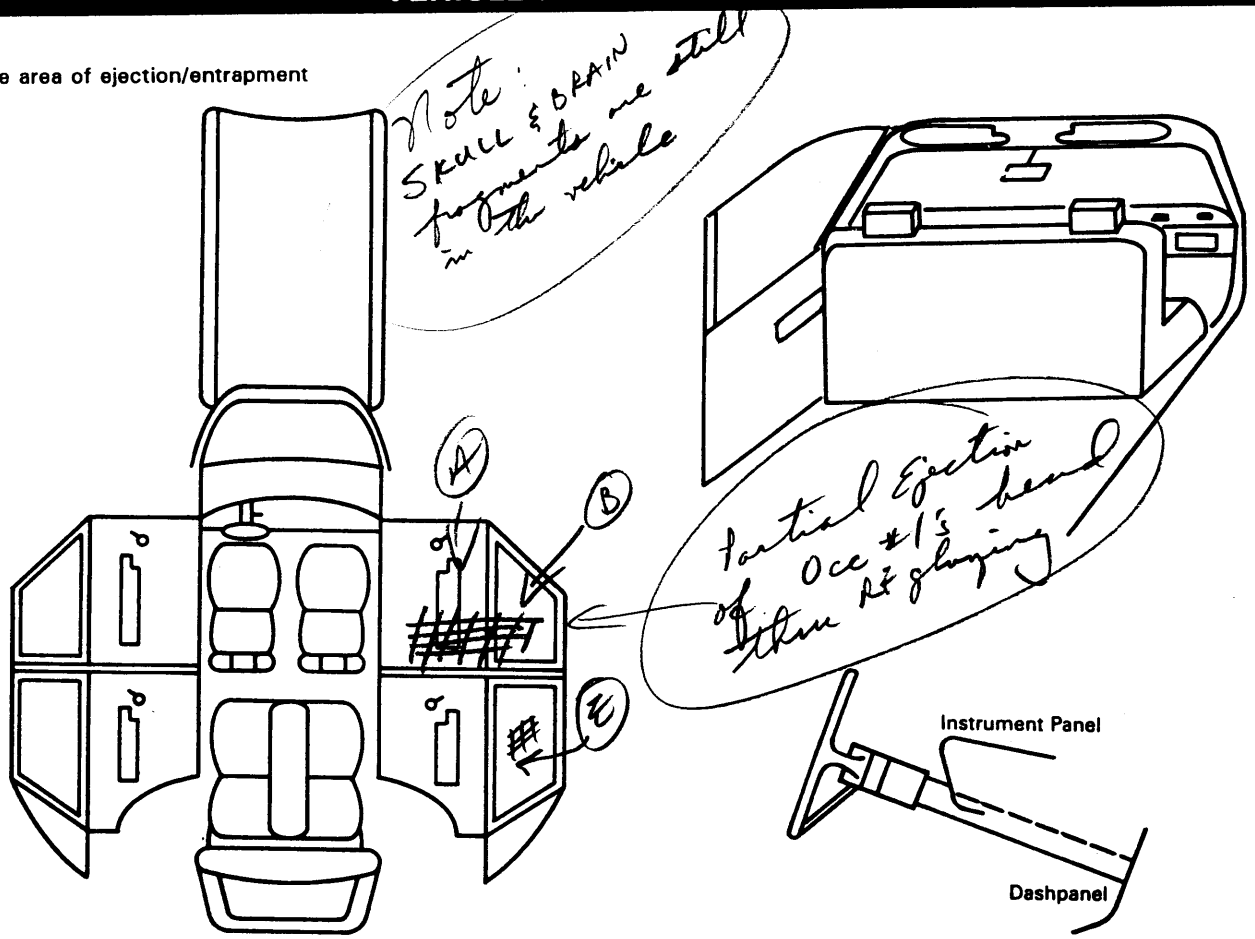

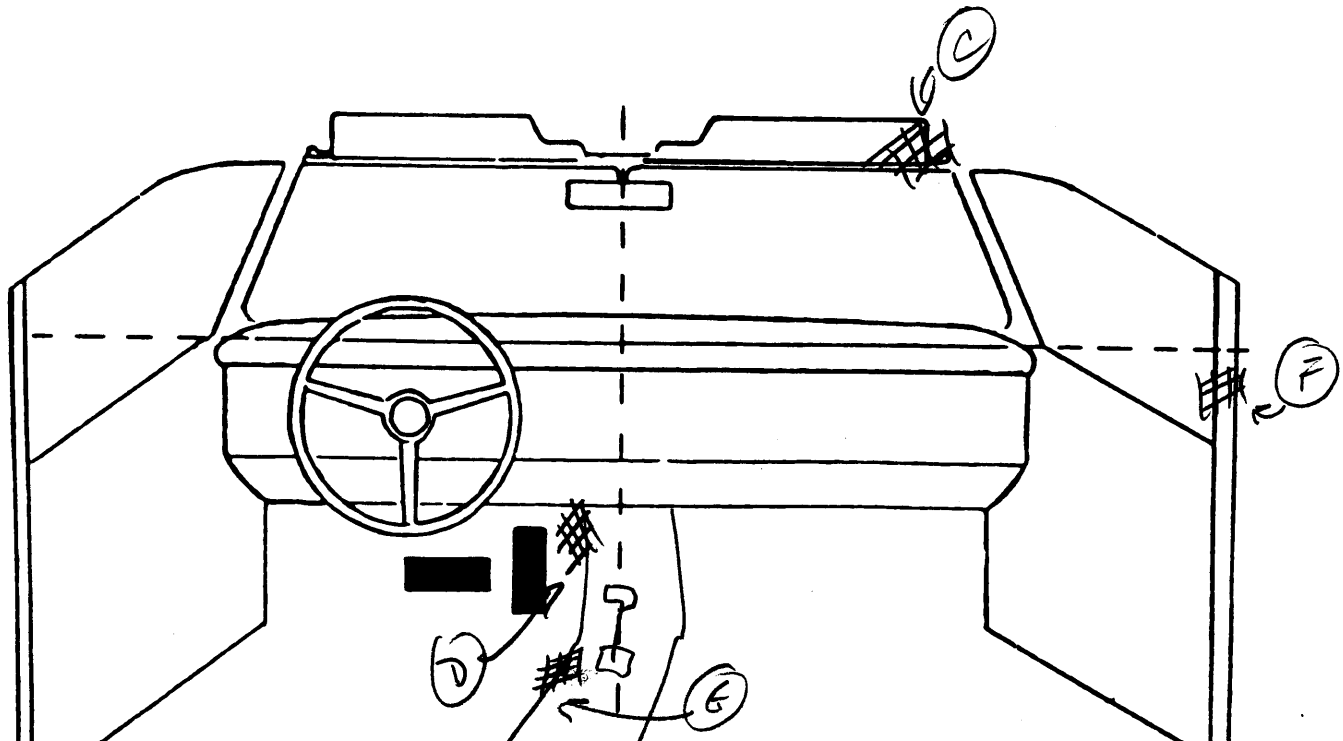

Sketch windshield contact(s) and the damaged area(s) on the instrument panel outline (e.g., radio, glove compartment, damage to instrument panel structure.
Cross hatch contact points, draw spider webs or use other annotation as may be appropriate.
Annotate the contacted area with a letter (begin with A) and list on the Points of Occupant Contact page.

POINTS OF OCCUPANT CONTACT

Contact	Interior Component Contacted	Occupant No. If Known	Body Region If Known	Supporting Physical Evidence	Confidence Level of Contact Point
A	30/31	1	(R) Side	DEFORMED OUTWARD	1
B	35	1	Head	Glazing Disintegrated	2
C	03 (R)	1	"	Broken	2
D	10	1	Legs	Deformed	1
E	35	1	Head	During/After Decapitation	2
F	33	1	(R) SHOULDER	CRACKED	1
G	57	1	(R) Leg	Cracked/Deformed	2
H					
I					
J					
K					
L					
M					
N					

CODES FOR INTERIOR COMPONENTS

FRONT
- (01) Windshield
- (02) Mirror
- (03) Sunvisor
- (04) Steering wheel rim
- (05) Steering wheel hub/spoke
- (06) Steering wheel (combination of codes 04 and 05)
- (07) Steering column, transmission selector lever, other attachment
- (08) Add on equipment (e.g., CB, tape deck, air conditioner)
- (09) Left instrument panel and below
- (10) Center instrument panel and below
- (11) Right instrument panel and below
- (12) Glove compartment door
- (13) Knee bolster
- (14) Windshield including one or more of the following: front header, A-pillar, instrument panel, mirror, or steering assembly (driver side only)
- (15) Windshield including one or more of the following: front header, A-pillar, instrument panel, or mirror (passenger side only)
- (16) Other front object (specify): _____

LEFT SIDE
- (20) Left side interior surface, excluding hardware or armrests
- (21) Left side hardware or armrest
- (22) Left A pillar
- (23) Left B pillar
- (24) Other left pillar (specify): _____
- (25) Left side window glass or frame
- (26) Left side window glass including one or more of the following: frame, window sill, A pillar, B pillar, or roof side rail.
- (27) Other left side object (specify): _____
- (28) Left side window sill

RIGHT SIDE
- (30) Right side interior surface, excluding hardware or armrests
- (31) Right side hardware or armrest
- (32) Right A pillar
- (33) Right B pillar
- (34) Other right pillar (specify): _____
- (35) Right side window glass or frame
- (36) Right side window glass including one or more of the following: frame, window sill, A pillar, B pillar, or roof side rail.
- (37) Other right side object (specify): _____
- (38) Right side window sill

INTERIOR
- (40) Seat, back support
- (41) Belt restraint webbing/buckle
- (42) Belt restraint B-pillar attachment point
- (43) Other restraint system component (specify): _____
- (44) Head restraint system
- (45) Air bag
- (46) Other occupants (specify): _____
- (47) Interior loose objects
- (48) Child safety seat (specify): _____
- (49) Other interior object (specify): _____

ROOF
- (50) Front header
- (51) Rear header
- (52) Roof left side rail
- (53) Roof right side rail
- (54) Roof or convertible top

FLOOR
- (56) Floor (including toe pan)
- (57) Floor or console mounted transmission lever, including console
- (58) Parking brake handle
- (59) Foot controls including parking brake

REAR
- (60) Backlight (rear window)
- (61) Backlight storage rack, door, etc.
- (62) Other rear object (specify): _____

CONFIDENCE LEVEL OF CONTACT POINT
- (1) Certain
- (2) Probable
- (3) Possible
- (9) Unknown

AUTOMATIC RESTRAINTS

NOTES: Encode the data for each applicable front seat position. The attribute for the variables may be found below. Restraint systems should be assessed during the vehicle inspection then coded on the Occupant Assessment Form.

AIR BAGS

		Left	Right
FIRST	Availability/Function	1	
	Deployment	4	
	Failure	1	

Air Bag System Availability/Function
(0) Not equipped/not available
(1) Air bag

Non-functional
(2) Air bag disconnected (specify): _____
(3) Air bag not reinstalled
(9) Unknown

Air Bag System Deployment
(0) Not equipped/not available
(1) Air bag deployed during accident (as a result of impact)
(2) Air bag deployed inadvertently just prior to accident
(3) Air bag deployed, accident sequence undetermined
(4) Nondeployed
(5) Unknown if deployed
(6) Air bag deployed as a result of a noncollision event during accident sequence (e.g., fire, explosion, electrical)
(9) Unknown

Did Air Bag System Fail?
(0) Not equipped/not available
(1) No
(2) Yes (specify): _____
(9) Unknown

AUTOMATIC BELTS

		Left	Right
FIRST	Availability/Function		
	Use		
	Type		
	Proper Use		
	Failure Modes		

Automatic (Passive) Belt System Availability/Function
(0) Not equipped/not available
(1) 2 point automatic belts
(2) 3 point automatic belts
(3) Automatic belts - type unknown

Non-functional
(4) Automatic belts destroyed or rendered inoperative
(9) Unknown

Automatic (Passive) Belt System Use
(0) Not equipped/not available/destroyed or rendered inoperative
(1) Automatic belt in use
(2) Automatic belt not in use (manually disconnected, motorized track inoperative)
(3) Automatic belt use unknown
(9) Unknown

Automatic (Passive) Belt System Type
(0) Not equipped/not available
(1) Non-motorized system
(2) Motorized system
(9) Unknown

Proper Use of Automatic (Passive) Belt System
(0) Not equipped/not available/not used
(1) Automatic belt used properly
(2) Automatic belt used properly with child safety seat

Automatic Belt Used Improperly
(3) Automatic shoulder belt worn under arm
(4) Automatic shoulder belt worn behind back
(5) Automatic belt worn around more than one person
(6) Lap portion of automatic belt worn on abdomen
(7) Automatic lap and shoulder belt or automatic shoulder belt used improperly with child safety seat (specify): _____
(8) Other improper use of automatic belt system (specify): _____
(9) Unknown

Automatic (Passive) Belt Failure Modes During Accident
(0) Not equipped/not available/not in use
(1) No automatic belt failure(s)
(2) Torn webbing (stretched webbing not included)
(3) Broken buckle or latchplate
(4) Upper anchorage separated
(5) Other anchorage separated (specify): _____
(6) Broken retractor
(7) Combination of above (specify):
(8) Other automatic belt failure (specify): _____
(9) Unknown

MANUAL RESTRAINTS

NOTES: Encode the applicable data for each seat position in the vehicle. The attribute for the variable may be found below. Restraint systems should be assessed during the vehicle inspection then coded on the Ocupant Assessment Form.

If a Child safety seat is present, encode the data on the back of this page.

If the vehicle has automatic restraints available, encode the appropriate data on the back of the previous page.

		Left	Center	Right
FIRST	Availability	4		4
	Use	00		00
	Failure Modes	0		0
SECOND	Availability	4	3	4
	Use	00	00	00
	Failure Modes	0	0	0
THIRD	Availability			
	Use			
	Failure Modes			
OTHER	Availability			
	Use			
	Failure Modes			

Manual (Active) Belt System Availability

(0) None available
(1) Belt removed/destroyed
(2) Shoulder belt
(3) Lap belt
(4) Lap and shoulder belt
(5) Belt available - type unknown

Integral Belt Partially Destroyed

(6) Shoulder belt (lap belt destroyed/removed)
(7) Lap belt (shoulder belt destroyed/removed)

(8) Other belt (specify): _____

(9) Unknown

Manual (Active) Belt System Use

(00) None used, not available, or belt removed/destroyed
(01) Inoperable (specify): _____
(02) Shoulder belt
(03) Lap belt
(04) Lap and shoulder belt
(05) Belt used - type unknown
(08) Other belt used (specify): _____
(12) Shoulder belt used with child safety seat
(13) Lap belt used with child safety seat
(14) Lap and shoulder belt used with child safety seat
(15) Belt used with child safety seat - type unknown
(18) Other belt used with child safety seat (specify): _____
(99) Unknown if belt used

Manual (Active) Belt Failure Modes During Accident

(0) No manual belt used or not available
(1) No manual belt failure(s)
(2) Torn webbing (stretched webbing not included)
(3) Broken buckle or latchplate
(4) Upper anchorage separated
(5) Other anchorage separated (specify): _____
(6) Broken retractor
(7) Combination of above (specify): _____
(8) Other manual belt failure (specify): _____
(9) Unknown

CHILD SAFETY SEAT FIELD ASSESSMENT

When a child safety seat is present enter the occupant's number in the first row and complete the column below the occupant's number using the codes listed below. Complete a column for each child safety seat present.

Occupant Number						
1. Type of Child Safety Seat						
2. Child Safety Seat Orientation						
3. Child Safety Seat Harness Usage						
4. Child Safety Seat Shield Uasge						
5. Child Safety Seat Tether Usage						
6. Child Safety Seat Make/Model	Specify Below for Each Child Safety Seat					

1. Type of Child Safety Seat
   - (0) No child safety seat
   - (1) Infant seat
   - (2) Toddler seat
   - (3) Convertible seat
   - (4) Booster seat
   - (7) Other type child safety seat (specify): _____
   - (8) Unknown child safety seat type
   - (9) Unknown if child safety seat used

2. Child Safety Seat Orientation
   - (00) No child safety seat

   Designed for Rear Facing for This Age/Weight
   - (01) Rear facing
   - (02) Forward facing
   - (08) Other orientation (specify): _____
   - (09) Unknown orientation

   Designed for Forward Facing for This Age/Weight
   - (11) Rear facing
   - (12) Forward facing
   - (18) Other orientation (specify): _____
   - (19) Unknown orientation

   Unknown Design or Orientation For This Age/Weight, or Unknown Age/Weight
   - (21) Rear facing
   - (22) Forward facing
   - (28) Other orientation (specify): _____
   - (29) Unknown orientation

   - (99) Unknown if child safety seat used

3. Child Safety Seat Harness Usage

4. Child Safety Seat Shield Usage

5. Child Safety Seat Tether Usage
   Note: Options Below Are Used for Variables 3-5.
   - (00) No child safety seat

   Not Designed with Harness/Shield/Tether
   - (01) After market harness/shield/tether added, not used
   - (02) After market harness/shield/tether used
   - (03) Child safety seat used, but no after market harness/shield/tether added
   - (09) Unknown if harness/shield/tether added or used

   Designed With Harness/Shield/Tether
   - (11) Harness/shield/tether not used
   - (12) Harness/shield/tether used
   - (19) Unknown if harness/shield/tether used

   Unknown If Designed With Harness/Shield/Tether
   - (21) Harness/shield/tether not used
   - (22) Harness/shield/tether used
   - (29) Unknown if harness/shield/tether used

   - (99) Unknown if child safety seat used

6. Child Safety Seat Make/Model
   (Specify make/model and occupant number)

   _____
   _____
   _____
   _____

HEAD RESTRAINTS/SEAT EVALUATION

NOTES: Encode the applicable data for each seat position in the vehicle. The attribute for these variables may be found at the bottom of the page. Head restraint type/damage and seat type/performance should be assessed during the vehicle inspection then coded on the Occupant Assessment Form.

		Left	Center	Right
FIRST	Head Restraint Type/Damage	3		3
	Seat Type	01		01
	Seat Performance	1		1
	Seat Orientation	1		1
SECOND	Head Restraint Type/Damage	1	0	1
	Seat Type	05	05	05
	Seat Performance	1	1	1
	Seat Orientation	1	1	1
THIRD	Head Restraint Type/Damage			
	Seat Type			
	Seat Performance			
	Seat Orientation			
OTHER	Head Restraint Type/Damage			
	Seat Type			
	Seat Performance			
	Seat Orientation			

Head Restraint Type/Damage by Occupant at This Occupant Position

(0) No head restraints
(1) Integral — no damage
(2) Integral — damaged during accident
(3) Adjustable — no damage
(4) Adjustable — damaged during accident
(5) Add-on — no damage
(6) Add-on — damaged during accident
(8) Other Specify): _____
(9) Unknown

Seat Type (this Occupant Position)

(00) No seat
(01) Bucket
(02) Bucket with folding back
(03) Bench
(04) Bench with separate back cushions
(05) Bench with folding back(s)
(06) Split bench with separate back cushions
(07) Split bench with folding back(s)
(08) Pedestal (i.e., column supported)
(09) Other seat type (specify): _____
(10) Box mounted seat (i.e., van type)
(99) Unknown

Seat Performance (this Occupant Position)

(0) No seat
(1) No seat performance failure(s)
(2) Seat adjusters failed
(3) Seat back folding locks or "seat back" failed specify: _____
(4) Seat tracks/anchors failed
(5) Deformed by impact of occupant
(6) Deformed by passenger compartment intrusion (specify): _____
(7) Combination of above (specify): _____
(8) Other (specify): _____
(9) Unknown

Seat Orientation (this Occupant Position)

(0) No seat
(1) Forward facing seat
(2) Rear facing seat
(3) Side facing seat (inward)
(4) Side facing seat (outward)
(8) Other (specify): _____
(9) Unknown

DESCRIBE ANY INDICATION OF ABNORMAL OCCUPANT POSTURE (I.E., UNUSUAL OCCUPANT CONTACT PATTERN)

NONE

EJECTION/ENTRAPMENT DATA

Complete the following if the researcher has any indication that an occupant was either ejected from or entrapped in the vehicle. Code the appropriate data on the Occpant Assessment Form.

EJECTION No [ ] Yes [✓]

Describe indications of ejection and body parts involved in partial ejection(s):

Partial Ejection of Occ #1's head thru RF glazing

Occupant Number	1					
Ejection	2					
(Note on Vehicle Interior Sketch) Ejection Area	3					
Ejection Medium	4					
Medium Status	2					

Ejection
- (1) Complete ejection
- (2) Partial ejection
- (3) Ejection, Unknown degree
- (9) Unknown

Ejection Area
- (1) Windshield
- (2) Left front
- (3) Right front
- (4) Left rear
- (5) Right rear
- (6) Rear
- (7) Roof
- (8) Other area (e.g., back of pickup, etc.) (specify): _____
- (9) Unknown

Ejection Medium
- (1) Door/hatch/tailgate
- (2) Nonfixed roof structure
- (3) Fixed glazing
- (4) Nonfixed glazing (specify): RF glazing
- (5) Integral structure
- (8) Other medium (specify): _____
- (9) Unknown

Medium Status (Immediately Prior to Impact)
- (1) Open
- (2) Closed
- (3) Integral structure
- (9) Unknown

ENTRAPMENT No [✓] Yes [ ]

Describe entrapment mechanism: _____

NONE

Component(s): _____

(Note in vehicle interior diagram)

26. Seat Type (this Occupant Position) 0 1
(00) Occupant not seated or no seat
(01) Bucket
(02) Bucket with folding back
(03) Bench
(04) Bench with separate back cushions
(05) Bench with folding back(s)
(06) Split bench with separate back cushions
(07) Split bench with folding back(s)
(08) Pedestal (i.e., column supported)
(09) Other seat type (specify): _____
(10) Box mounted seat (i.e., van type)
(99) Unknown

27. Seat Performance (this Occupant Position) 1
(0) Occupant not seated or no seat
(1) No seat performance failure(s)
(2) Seat adjusters failed
(3) Seat back folding locks or "seat back" failed
(4) Seat track/anchors failed
(5) Deformed by impact of occupant
(6) Deformed by passenger compartment intrusion (specify): _____
(7) Combination of above (specify): _____
(8) Other (specify): _____
(9) Unknown

CHILD SAFETY SEAT

28. Child Safety Seat Make/Model 0 0 0
(000) No child safety seat
Applicable codes are found in your NASS CDS Data Collection, Coding and Editing
(950) Built-in child safety seat
(997) Other make/model (specify): _____
(998) Unknown make/model
(999) Unknown if child safety seat used

29. Type of Child Safety Seat 0
(0) No child safety seat
(1) Infant seat
(2) Toddler seat
(3) Convertible seat
(4) Booster seat
(7) Other type child safety seat (specify): _____
(8) Unknown child safety seat type
(9) Unknown if child safety seat used

30. Child Safety Seat Orientation 0 0
(00) No child safety seat

Designed for Rear Facing for This Age/Weight
(01) Rear facing
(02) Forward facing
(08) Other orientation (specify): _____
(09) Unknown orientation

Designed For Forward Facing for This Age/Weight
(11) Rear facing
(12) Forward facing
(18) Other orientation (specify): _____
(19) Unknown orientation

Unknown Design or Orientation For This Age/Weight, or Unknown Age/Weight
(21) Rear facing
(22) Forward facing
(28) Other orientation (specify): _____
(29) Unknown orientation

(99) Unknown if child safety seat used

31. Child Safety Seat Harness Usage 0 0

32. Child Safety Seat Shield Usage 0 0

33. Child Safety Seat Tether Usage 0 0
Note: Options below applicable to Variables OA31-OA33.
(00) No child safety seat

Not Designed With Harness/Shield/Tether
(01) After market harness/shield/tether added, not used
(02) After market harness/shield/tether used
(03) Child safety seat used, but no after market harness/shield/tether added
(09) Unknown if harness/shield/tether added or used

Designed With Harness/Shield/Tether
(11) Harness/shield/tether not used
(12) Harness/shield/tether used
(19) Unknown if harness/shield/tether used

Unknown If Designed With Harness/Shield/Tether
(21) Harness/shield/tether not used
(22) Harness/shield/tether used
(29) Unknown if harness/shield/tether used

(99) Unknown if child safety seat used

PSU NUMBER 09

CASE NUMBER 506A

VEHICLE NUMBER 01

OCCUPANT NUMBER 01

OCCUPANT INJURY FORM

THE FOLLOWING DATA IS NOT INCLUDED IN THIS CASE:

[✓] ENTIRE FORM

[] PAGE NUMBER (S) _____

U.S. Department of Transportation
National Highway Traffic Safety Administration

UPDATE FORM

NATIONAL ACCIDENT SAMPLING SYSTEM
CRASHWORTHINESS DATA SYSTEM

1. Primary Sampling Unit Number: 09
2. Case Number — Stratum: 506 A
3. Vehicle Number: 01
4. Occupant Number: 01

[redacted] 1993 Aut

Driver or Occupant Name: [redacted]

Address:

Other Information: 92 CAMRY W/BRAIN SPLATTED

Autopsy

(Sanitize this section prior to Update submission.)

UPDATED CASE INFORMATION

	INITIAL SUBMISSION	UPDATED INFORMATION
GV12. Alcohol Test Result Result for Driver	99	00
GV39. Other Drug Specimen Test Type for Driver	0	1
GV40.-GV41. Narcotic Drug	00	00
GV42.-GV43. Depressant Drug	00	00
GV44.-GV45. Stimulant Drug	00	00
GV46.-GV47. Hallucinogen Drug	00	00
GV48.-GV49. Cannabinoid Drug	00	00
GV50.-GV51. Phencyclidine (PCP)	00	02
GV52.-GV53. Inhalant Drug	00	00
GV54.-GV55. Other Drug (Excluding Nicotine, Aspirin, Alcohol, Drugs Administered Post-Crash)	00	00
GV56. Driver's Zip Code	[redacted]	
GV57. Driver's Race/Ethnic Origin	2	2
OA05. Occupant's Age	30	30
OA06. Occupant's Sex	1	1
OA07. Occupant's Height	69	70
OA08. Occupant's Weight	150	173
OA17. Manual (Active) Belt System Availability	4	4
OA18. Manual (Active) Belt System Use	00	00

	INITIAL SUBMISSION	UPDATED INFORMATION
OA21. Air Bag System Availability/Function	1	1
OA22. Air Bag System Deployment	4	4
OA35. Treatment - Mortality	1	1
OA36. Type of Medical Facility (for Initial Treatment)	0	0
OA37. Hospital Stay	00	00
OA38. Working Days Lost	62	62
OA39. Time to Death	01	01
OA40. 1st Medically Reported Cause of Death	99	06
OA41. 2nd Medically Reported Cause of Death	00	00
OA42. 3rd Medically Reported Cause of Death	00	00
OA43. Number of Recorded Injuries for This Occupant	01	06
OA44. Automatic (Passive) Belt System Availability/Function	0	0
OA45. Automatic (Passive) Belt System Use	0	0
OA50. Glasgow Coma Scale (GCS) Score	01	01
OA51 Was the Occupant Given Blood?	1	1
OA52. Arterial Blood Gases (ABG) - HCO_3	01	01
____. _____	____	____
____. _____	____	____

STATUS OF LOG INJURY INFORMATION

	INITIAL SUBMISSION	UPDATED INFORMATION
OAL12. Injury Treatment Status	___	___
OAL13. Injury Information		
Official		
a. Autopsy (invasive examination)	B ___	___ 1 1
b. Post-ER medical record which includes information about death based on non-invasive examination	B ___	___
c. Admission record/summary or admission/discharge face sheet	B ___	___
d. Discharge summary	B ___	___
e. Operative report	B ___	___
f. Radiographic record(s) post ER visit	B ___	___
g. History and physical examination and/or consultation records	B ___	___
h. Emergency room records	B ___	___
i. Radiographic record(s) associated with ER visit	B ___	___
j. Private physician	B ___	___
Unofficial		
k. Lay coroner	B ___	___
l. EMS record	B ___	___
m. Interviewee	B ___	___
n. Other source (specify): _____	B ___	B ___
o. Police report	B ___	B ___
OAL14. Medical Facility Code	___	___
OIL07. Date Official Medical Data Obtained	[redacted] / [redacted] / 93	

INJURY DATA CODED ON INITIAL SUBMISSION

	Source of Injury Data	O.I.C.-A.I.S Body Region	Aspect	Lesion	System Organ	A.I.S. Severity	Injury Source	Injury Source Confidence Level	Direct/ Indirect Injury	Occupant Area Intrusion No.
1st	5. ___	6. ___	7. ___	8. ___	9. ___	10. ___	11. ___	12. ___	13. ___	14. ___
2nd	15. ___	16. ___	17. ___	18. ___	19. ___	20. ___	21. ___	22. ___	23. ___	24. ___
3rd	25. ___	26. ___	27. ___	28. ___	29. ___	30. ___	31. ___	32. ___	33. ___	34. ___
4th	35. ___	36. ___	37. ___	38. ___	39. ___	40. ___	41. ___	42. ___	43. ___	44. ___
5th	45. ___	46. ___	47. ___	48. ___	49. ___	50. ___	51. ___	52. ___	53. ___	54. ___
6th	55. ___	56. ___	57. ___	58. ___	59. ___	60. ___	61. ___	62. ___	63. ___	64. ___
7th	65. ___	66. ___	67. ___	68. ___	69. ___	70. ___	71. ___	72. ___	73. ___	74. ___
8th	75. ___	76. ___	77. ___	78. ___	79. ___	80. ___	81. ___	82. ___	83. ___	84. ___
9th	85. ___	86. ___	87. ___	88. ___	89. ___	90. ___	91. ___	92. ___	93. ___	94. ___
10th	95. ___	96. ___	97. ___	98. ___	99. ___	100. ___	101. ___	102. ___	103. ___	104. ___
11th	105. ___	106. ___	107. ___	108. ___	109. ___	110. ___	111. ___	112. ___	113. ___	114. ___
12th	115. ___	116. ___	117. ___	118. ___	119. ___	120. ___	121. ___	122. ___	123. ___	124. ___
13th	125. ___	126. ___	127. ___	128. ___	129. ___	130. ___	131. ___	132. ___	133. ___	134. ___
14th	135. ___	136. ___	137. ___	138. ___	139. ___	140. ___	141. ___	142. ___	143. ___	144. ___
15th	145. ___	146. ___	147. ___	148. ___	149. ___	150. ___	151. ___	152. ___	153. ___	154. ___

Note: Keep a photocopy of the following original submitted pages when applicable: Exterior Vehicle Form pages 2, 3, 4; Interior Vehicle Form pages 1-reverse, 2, 4, 5; Occupant Injury Form pages 2, 3, 3-reverse; Interview Form pages 3, 4, 5.

09-506A
V1 01

INJURY DATA

Record below the actual injuries sustained by this occupant that were identified from the official and unofficial data sources. Remember not to double count an injury just because it was identified from two different sources. If greater than ten injuries have been documented, encode the balance on the Occupant Injury Supplement.

	Source of Injury Data	O.I.C.-A.I.S Body Region	Aspect	Lesion	System Organ	A.I.S. Severity	Injury Source	Injury Source Confidence Level	Direct/ Indirect Injury	Occupant Area Intrusion No.
1st	✓ 5. 1	6. F	7. 1	8. F	9. S	10. 2	11. 85	12. 1	13. 1	14. 00
2nd	✓ 15. 1	16. F	17. W	18. L	19. I	20. 1	21. 85	22. 1	23. 1	24. 00
3rd	✓ 25. 1	26. F	27. L	28. L	29. O	30. 1	31. 85	32. 1	33. 1	34. 00
4th	✓ 35. 1	36. F	37. R	38. C	39. O	40. 1	41. 85	42. 1	43. 1	44. 00
5th	✓ 45. 1	46. N	47. R	48. L	49. I	50. 1	51. 85	52. 1	53. 1	54. 00
6th	✓ 55. 1	56. H	57. ~~N~~ I	58. ~~N~~ F	59. ~~W~~ S	60. ~~6~~ 4	61. 85	62. 1	63. 1	64. 00
7th	65. 1	66. H	67. P	68. F	69. S	70. 2	71. 85	72. 1	73. 1	74. 00
8th	75. 1	76. H	77. U	78. F	79. S	80. 3	81. 85	82. 1	83. 1	84. 00
9th	85. 1	86. H	87. I	88. L	89. B	90. 6	91. 85	92. 1	93. 1	94. 00
10th	95. 1	96. H	97. U	98. L	99. B	100. 4	101. 85	102. 1	103. 1	104. 00

If greater than 10 injuries, continue on reverse side. If greater than 25 injuries, code additional on Occupant Injury Data Supplement.

OCCUPANT INJURY DATA

	Source of Injury Data	O.I.C.-A.I.S Body Region	Aspect	Lesion	System Organ	A.I.S. Severity	Injury Source	Injury Source Confidence Level	Direct/ Indirect Injury	Occupant Area Intrusion No.
11th	1	H	R	L	E	1	85	2	1	00
12th	1	H	A	L	I	1	85	2	1	00
13th										
14th										
15th										
16th										
17th										
18th										
19th										
20th										
21st										
22nd										
23rd										
24th										
25th										

09-506A
V1 01

OFFICIAL INJURY DATA — SOFT TISSUE INJURIES

Indicate the Location, Lesion, Detail (size, depth, fracture type, head injury clinical signs and neurological deficits), and Source of all injuries indicated by official sources (or from PAR or other unofficial sources if medical records and interviewee data are unavailable.)

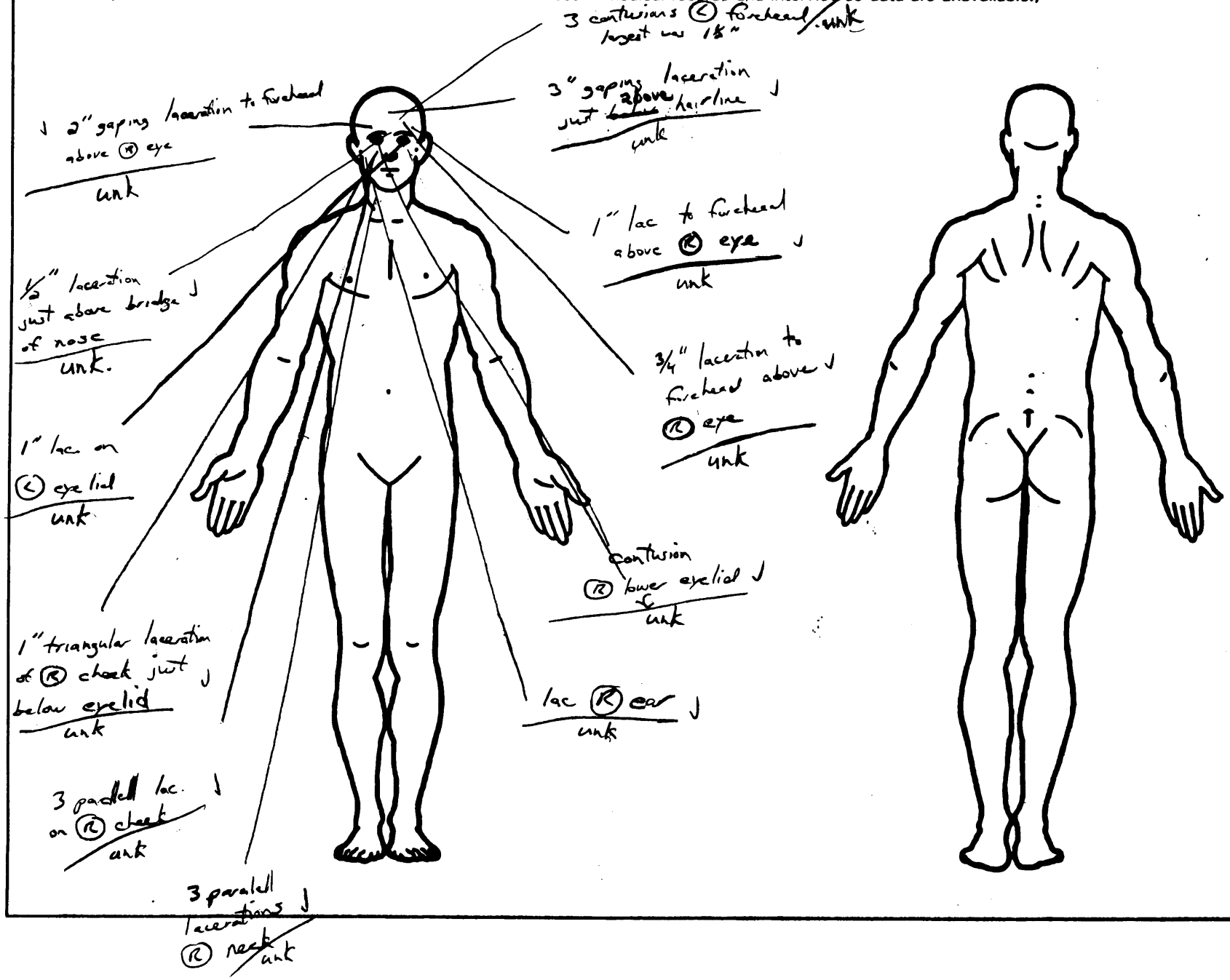

SOURCE OF INJURY DATA

OFFICIAL

(1) Autopsy records with or without hospital medical records
(2) Hospital medical records other than emergency room (e.g., dishcarge summary)
(3) Emergency room records only (including associated X-rays or other lab reports)
(4) Private physician, walk-in or emergency clinic

UNOFFICIAL

(5) Lay coroner report
(6) E.M.S. personnel
(7) Interviewee
(8) Other source (specify): _____
(9) Police

INJURY SOURCE

FRONT

(01) Windshield
(02) Mirror
(03) Sunvisor
(04) Steering wheel rim
(05) Steering wheel hub/spoke
(06) Steering wheel (combination of codes 04 and 05)
(07) Steering column, transmission selector lever, other attachment
(08) Add on equipment (e.g., CB, tape deck, air conditioner)
(09) Left instrument panel and below
(10) Center instrument panel and below
(11) Right instrument panel and below
(12) Glove compartment door
(13) Knee bolster
(14) Windshield including one or more of the following: front header, A-pillar, instrument panel, mirror, or steering assembly (driver side only)
(15) Windshield including one or more of the following: front header, A-pillar, instrument panel, or mirror (passenger side only)
(16) Other front object (specify): _____

LEFT SIDE

(20) Left side interior surface, excluding hardware or armrests
(21) Left side hardware or armrest
(22) Left A pillar
(23) Left B pillar
(24) Other left pillar (specify): _____
(25) Left side window glass or frame
(26) Left side window glass including one or more of the following: frame, window sill, A-pillar, B-pillar, or roof side rail.
(27) Other left side object (specify): _____
(28) Left side window sill

RIGHT SIDE

(30) Right side interior surface, excluding hardware or armrests
(31) Right side hardware or armrest
(32) Right A pillar
(33) Right B pillar
(34) Other right pillar (specify): _____
(35) Right side window glass or frame
(36) Right side window glass including one or more of the following: frame, window sill, A pillar, B pillar, or roof side rail.
(37) Other right side object (specify): _____
(38) Right side window sill

INTERIOR

(40) Seat, back support
(41) Belt restraint webbing/buckle
(42) Belt restraint B-pillar attachment point
(43) Other restraint system component (specify): _____
(44) Head restraint system
(45) Air bag
(46) Other occupants (specify): _____
(47) Interior loose objects
(48) Child safety seat (specify): _____
(49) Other interior object (specify): _____

ROOF

(50) Front header
(51) Rear header
(52) Roof left side rail
(53) Roof right side rail
(54) Roof or convertible top

FLOOR

(56) Floor (including toe pan)
(57) Floor or console mounted transmission lever, including console
(58) Parking brake handle
(59) Foot controls including parking brake

REAR

(60) Backlight (rear window)
(61) Backlight storage rack, door, etc.
(62) Other rear object (specify): _____

EXTERIOR of OCCUPANT'S VEHICLE

(65) Hood
(66) Outside hardware (e.g., outside mirror, antenna)
(67) Other exterior surface or tires (specify): _____
(68) Unknown exterior objects

EXTERIOR OF OTHER MOTOR VEHICLE

(70) Front bumper
(71) Hood edge
(72) Other front of vehicle (specify): _____
(73) Hood
(74) Hood ornament
(75) Windshield, roof rail, A-pillar
(76) Side surface
(77) Side mirrors
(78) Other side protrusions (specify) _____
(79) Rear surface
(80) Undercarriage
(81) Tires and wheels
(82) Other exterior of other motor vehicle (specify): _____
(83) Unknown exterior of other motor vehicle

OTHER VEHICLE OR OBJECT IN THE ENVIRONMENT

(84) Ground
(85) Other vehicle or object (specify) telephone pole
(86) Unknown vehicle or object

NONCONTACT INJURY

(90) Fire in vehicle
(91) Flying glass
(92) Other noncontact injury source (specify): _____
(93) Air bag exhaust gases
(97) Injured, unknown source

INJURY SOURCE CONFIDENCE LEVEL

(1) Certain
(2) Probable
(3) Possible
(9) Unknown

DIRECT/INDIRECT INJURY

(1) Direct contact injury
(2) Indirect contact injury
(3) Noncontact injury
(7) Injured, unknown source

OCCUPANT INJURY CLASSIFICATION

O.I.C. Body Region

(M) Abdomen
(Q) Ankle—foot
(A) Arm (upper)
(B) Back-thoracolumbar spine
(C) Chest
(E) Elbow
(F) Face
(R) Forearm
(H) Head—skull
(U) Injured, unknown region
(K) Knee
(L) Leg (lower)
(Y) Lower limbs(s) (whole or unknown part)
(N) Neck—cervical spine
(P) Pelvic—hip
(S) Shoulder
(T) Thigh
(X) Upper limb(s) (whole or unknown part)
(O) Whole body
(W) Wrist—hand

Aspect of Injury

(A) Anterior—front
(B) Bilateral (rib fracture only)
(C) Central
(I) Inferior—lower
(U) Injured, unknown aspect
(L) Left
(P) Posterior—back
(R) Right
(S) Superior—upper
(W) Whole region

Lesion

(A) Abrasion
(M) Amputation
(V) Avulsion
(B) Burn
(K) Concussion
(C) Contusion
(N) Crush
(G) Detachment, separation
(D) Dislocation
(F) Fracture
(Z) Fracture and dislocation
(U) Injured, unknown lesion
(L) Laceration
(O) Other
(P) Perforation, puncture
(R) Rupture
(S) Sprain
(T) Strain
(E) Total severance, transection

System/Organ

(W) All systems in region
(A) Arteries—veins
(B) Brain
(D) Digestive
(E) Ears
(O) Eye
(H) Heart
(U) Injured, unknown system
(I) Integumentary
(J) Joints
(K) Kidneys
(L) Liver
(M) Muscles
(N) Nervous system
(P) Pulmonary—lungs
(R) Respiratory
(S) Skeletal
(C) Spinal cord
(Q) Spleen
(T) Thyroid, other endocrine gland
(V) Vertebrae

Abbreviated Injury Scale

(1) Minor injury
(2) Moderate injury
(3) Seriour injury
(4) Severe injury
(5) Critical injury
(6) Maximum (untreatable)
(7) Injured, unknown severity

OFFICIAL INJURY DATA — SKELETAL INJURIES

Restrained?

___ No

___ Yes

Blood Alcohol Level (mg/dl)

BAL = ____

Glasgow Coma Scale Score

GCSS = ____

Units of Blood Given

Units = ____

Aterial Blood Gases

pH = __.__

PO_2 = ____

PCO_2 ____

HCO_3 ____

Indicate the Location, Lesion, Detail (size, depth, fracture type, head injury clinical signs and neurological deficits), and Source of all injuries indicated by official sources (or from PAR or other unofficial sources if medical records and interviewee data are unavailable.)

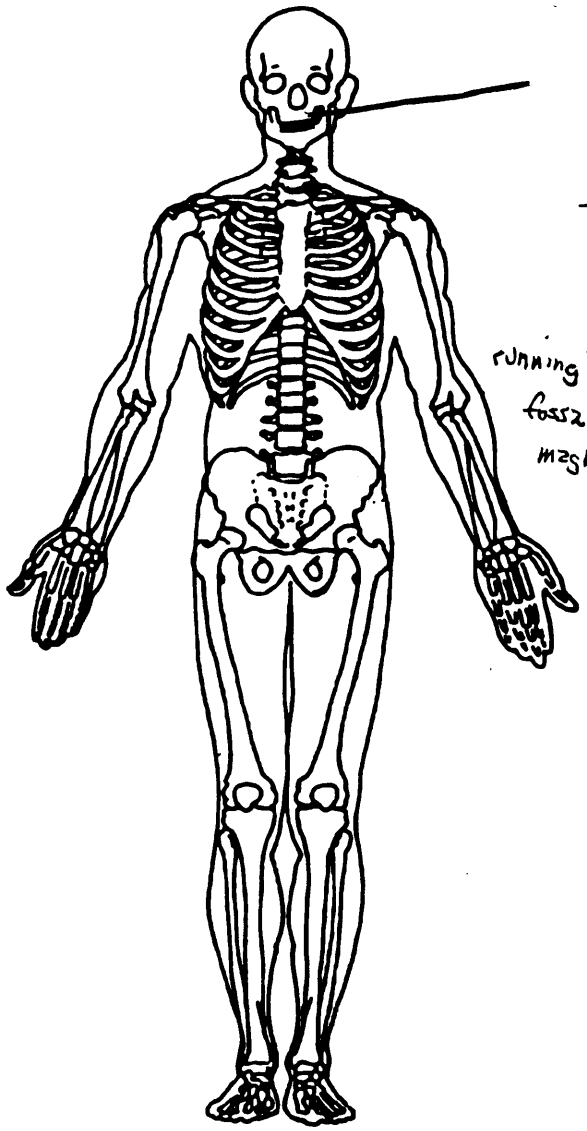

maxilla fx
bilateral
unk

teeth of upper jaw were misaligned

running through posterior cranial fossa into the foramen magnum

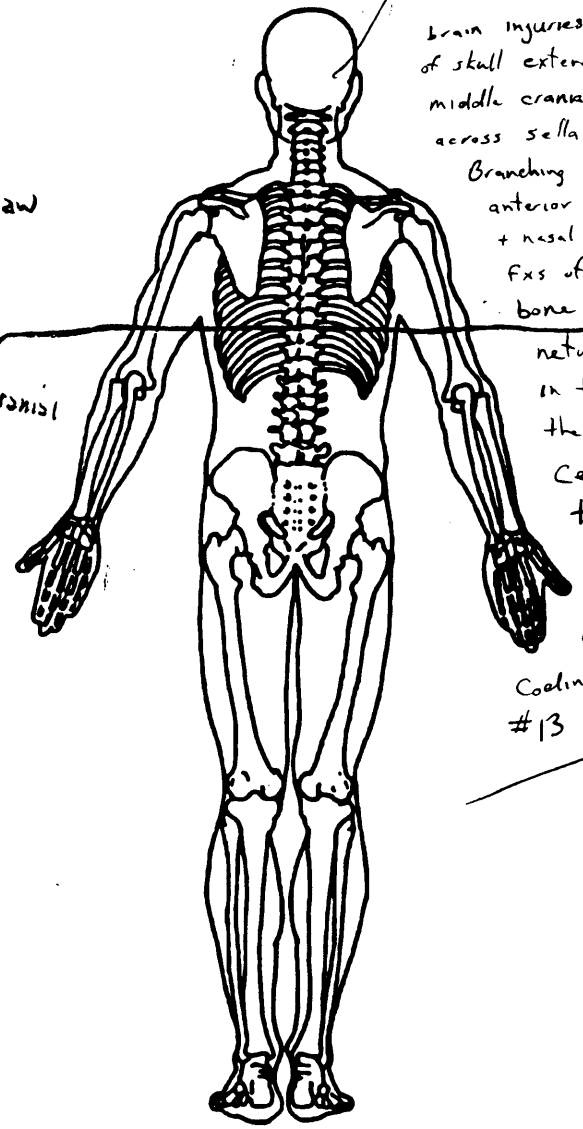

numerous comminuted skull fxs + multiple brain injuries. Hinge fx of skull extending thru middle cranial fossae + across sella turcica. Branching fx involving anterior cranial fossae + nasal bone. Linear fxs of the occipital bone. Branching network of fxs in the vault of the skull. Cerebrum was totally avulsed.

* Note *
Applied Coding Convention #13

unk

National Accident Sampling System-Crashworthiness Data System: Update Form

Page 4

09-506A
VI 01

OFFICIAL INJURY DATA — INTERNAL INJURIES

Indicate the Location, Lesion, Detail (size, depth, fracture type, head injury clinical signs and neurological deficits), and Source of all injuries indicated by official sources (or from PAR or other unofficial sources if medical records and interviewee data are unavailable.)

numerous laceration to brain. Corpus callosum lacerated. Cerebrum avulsed – totally from brain stem

Note: Applied Coding Convention #13 which I interpreted to subsume all brain injuries as well as ~~skull fx~~

unk

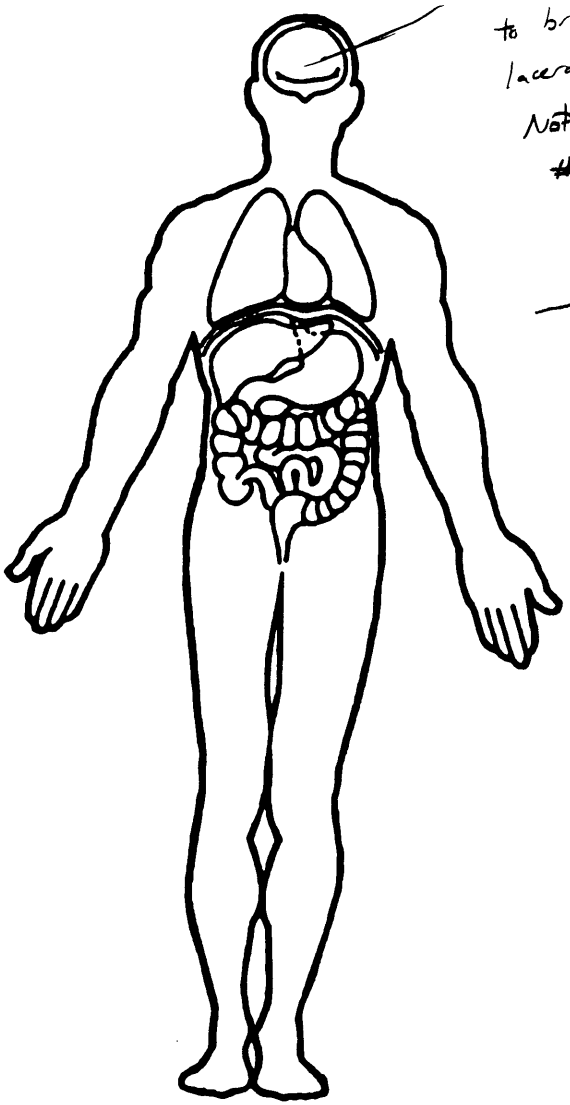

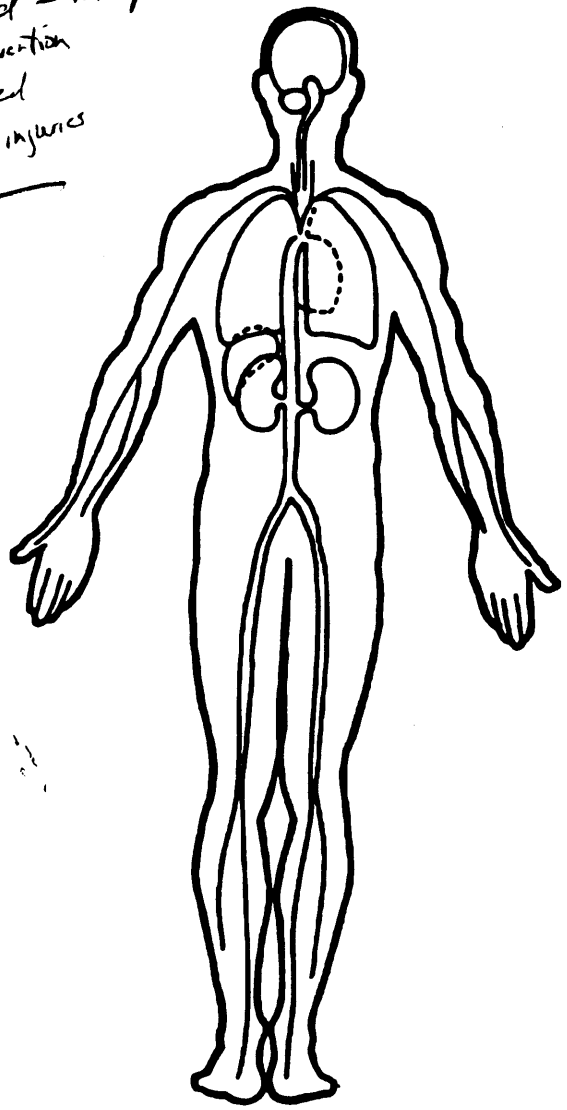

09-506A
V2

OCCUPANT RELATED

16. Driver Presence in Vehicle 1
(0) Driver not present
(1) Driver present
(9) Unknown

17. Number of Occupants This Vehicle 0 2
(00-96) Code actual number of occupants for this vehicle
(97) 97 or more
(99) Unknown

PER INTERVIEW

18. Number of Occupant Forms Submitted 0 2

VEHICLE WEIGHT ITEMS

19. Vehicle Curb Weight 0 2 , 6 0 0
2631 Code weight to nearest 100 pounds.
(010) Less than 1050 pounds
(135) 13,500 pounds or more
(999) Unknown

Source: [redacted]

20. Vehicle Cargo Weight 0 , 0 0 0
____ Code weight to nearest 100 pounds.
(00) Less than 50 pounds
(97) 9,650 pounds or more
(99) Unknown

RECONSTRUCTION DATA

21. Towed Trailing Unit 0
(0) No towed unit
(1) Yes—towed trailing unit
(9) Unknown

22. Documentation of Trajectory Data for This Vehicle 0
(0) No
(1) Yes

23. Post Collision Condition of Tree or Pole (For Highest Delta V) 0
(0) Not collision (for highest delta V) with tree or pole
(1) Not damaged
(2) Cracked/sheared
(3) Tilted <45 degrees
(4) Tilted ≥45 degrees
(5) Uprooted tree
(6) Separated pole from base
(7) Pole replaced
(8) Other (specify): _____
(9) Unknown

24. Rollover 0
(0) No rollover (no overturning)

Rollover (primarily about the longitudinal axis)
(1) Rollover, 1 quarter turn only
(2) Rollover, 2 quarter turns
(3) Rollover, 3 quarter turns
(4) Rollover, 4 or more quarter turns (specify): _____

(5) Rollover--end-over-end (i.e., primarily about the lateral axis)
(9) Rollover (overturn), details unknown

OVERRIDE/UNDERRIDE (THIS VEHICLE)

25. Front Override/Underride (this Vehicle) 0

26. Rear Override/Underride (this Vehicle) 0

(0) No override/underride, or not an end-to-end impact

Override (see specific CDC)
(1) 1st CDC
(2) 2nd CDC
(3) Other not automated CDC (specify): _____

Underride (see specific CDC)
(4) 1st CDC
(5) 2nd CDC
(6) Other not automated CDC (specify): _____

(7) Medium/heavy truck or bus override
(9) Unknown

HEADING ANGLE AT IMPACT FOR HIGHEST DELTA V

Values: (000)-(359) Code actual value
(997) Noncollision
(998) Impact with object
(999) Unknown

27. Heading Angle For This Vehicle 1 7 9

28. Heading Angle For Other Vehicle 1 9 5

PSU 09-506A
V-02

Category	Configuration	ACCIDENT TYPES (Includes Intent)				
I. Single Driver	A. Right Roadside Departure	01 DRIVE OFF ROAD	02 CONTROL/ TRACTION LOSS	03 AVOID COLLISION WITH VEH., PED., ANIM.	04 SPECIFICS OTHER	05 SPECIFICS UNKNOWN
	B. Left Roadside Departure	06 DRIVE OFF ROAD	07 CONTROL/ TRACTION LOSS	08 AVOID COLLISION WITH VEH., PED., ANIM.	09 SPECIFICS OTHER	10 SPECIFICS UNKNOWN
	C. Forward Impact	11 PARKED VEH.	12 STA. OBJECT	13 PEDESTRIAN/ ANIMAL	14 END DEPARTURE	15 SPECIFICS OTHER / 16 SPECIFICS UNKNOWN
II. Same Trafficway Same Direction	D. Rear-End	20, 22, 21, 23 STOPPED 21, 22, 23	24, 26, 25, 27 SLOWER 25, 26, 27	28, 30, 29, 31 DECEL. 29, 30, 31	(EACH • 32) SPECIFICS OTHER	(EACH • 33) SPECIFICS UNKNOWN
	E. Forward Impact	34, 35 CONTROL/ TRACTION LOSS	36, 37 CONTROL/ TRACTION LOSS	38, 39 AVOID COLLISION WITH VEH.	40, 41 AVOID COLLISION WITH OBJECT	(EACH • 42) SPECIFICS OTHER / (EACH • 43) SPECIFICS UNKNOWN
	F. Sideswipe Angle	44, 45, 46, 47		(EACH • 48) SPECIFICS OTHER		(EACH • 49) SPECIFICS UNKNOWN
III. Same Trafficway Opposite Direction	G. Head-On	50, 51 LATERAL MOVE	(EACH • 52) SPECIFICS OTHER		(EACH • 53) SPECIFICS UNKNOWN	
	H. Forward Impact	54, 55 CONTROL/ TRACTION LOSS	56, 57 CONTROL/ TRACTION LOSS	58, 59 AVOID COLLISION WITH VEH.	60, 61 AVOID COLLISION WITH OBJECT	(EACH • 62) SPECIFICS OTHER / (EACH • 63) SPECIFICS UNKNOWN
	I. Sideswipe/ Angle	64, 65 LATERAL MOVE	(EACH • 66) SPECIFICS OTHER		(EACH • 67) SPECIFICS UNKNOWN	
IV. Change Trafficway Vehicle Turning	J. Turn Across Path	68, 69 INITIAL OPPOSITE DIRECTIONS	70, 71 INITIAL SAME DIRECTIONS	72, 73	(EACH • 74) SPECIFICS OTHER	(EACH • 75) SPECIFICS UNKNOWN
	K. Turn Into Path	76, 77 TURN INTO SAME DIRECTION	78, 79 TURN INTO SAME DIRECTION	80, 81 TURN INTO OPPOSITE DIRECTIONS	82, 83 TURN INTO OPPOSITE DIRECTIONS	(EACH • 84) SPECIFICS OTHER / (EACH • 85) SPECIFICS UNKNOWN
V. Intersecting Paths (Vehicle Damage)	L. Straight Paths	86, 87	88, 89	(EACH • 90) SPECIFICS OTHER		(EACH • 91) SPECIFICS UNKNOWN
VI. Miscellaneous	M. Backing Etc.	92 BACKING VEH. / 93 OTHER VEH. OR OBJECT		98 Other Accident Type 99 Unknown Accident Type 00 No Impact		

09-506A
V2

OTHER DATA

56. Driver's Zip Code [redacted]

(00000) Driver not present
(00001) Driver not a resident of U.S. or territories
_____ Code actual 5-digit zip code
(99999) Unknown

57. Driver's Race/Ethnic Origin 2
(0) Driver not present
(1) White (non-Hispanic)
(2) Black (non-Hispanic)
(3) White (Hispanic)
(4) Black (Hispanic)
(5) American Indian, Eskimo or Aleut
(6) Asian or Pacific Islander
(8) Other (specify): _____
(9) Unknown

58. Vehicle Special Use (This Trip) 0
(0) No special use
(1) Taxi
(2) Vehicle used as school bus
(3) Vehicle used as other bus
(4) Military
(5) Police
(6) Ambulance
(7) Hearse
(8) Fire truck or car
(9) Unknown

ROLLOVER DATA

If GV07 (Body Type) ≠ 1-49, leave GV59-GV63 blank.
If GV24 (Rollover) = 0, then GV59-GV63 must equal 0.
If GV24 = 9, then GV59-GV63 must equal 9.

59. Rollover Initiation Type 0
(0) No rollover
(1) Trip-over
(2) Flip-over
(3) Turn-over
(4) Climb-over
(5) Fall-over
(6) Bounce-over
(7) Collision with another vehicle
(8) Other rollover initiation type specify): _____
(9) Unknown rollover initiation type

60. Location of Rollover Initiation 0
(0) No rollover
(1) On roadway
(2) On shoulder—paved
(3) On shoulder—unpaved
(4) On roadside or divided trafficway median
(9) Unknown

61. Rollover Initiation Object Contacted 0 0

62. Location on Vehicle Where Initial Principal Tripping Force Is Applied 0
(0) No rollover
(1) Wheels/tires
(2) Side plane
(3) End plane
(4) Undercarriage
(5) Other location on vehicle (specify): _____
(8) Non-contact rollover forces (specify): _____
(9) Unknown

63. Direction of Initial Roll 0
(0) No rollover
(1) Roll right - primarily about the longitudinal axis
(2) Roll left - primarily about the longitudinal axis
(5) End-over-end (i.e., primarily about the lateral axis)
(9) Unknown roll direction

PRECRASH DATA

64. Pre-Event Movement (Prior to Recognition of Critical Event) 0 1
(01) Going straight
(02) Slowing or stopping in traffic lane
(03) Starting in traffic lane
(04) Stopped in traffic lane
(05) Passing or overtaking another vehicle
(06) Disabled or parked in travel lane
(07) Leaving a parking position
(08) Entering a parking position
(09) Turning right
(10) Turning left
(11) Making a U-turn
(12) Backing up (other than for parking position)
(13) Negotiating a curve
(14) Changing lanes
(15) Merging
(16) Successful avoidance maneuver to a previous critical event
(97) Other (specify): _____
(98) No driver present
(99) Unknown

PSU 09-506A
V-01

CODES FOR ROLLOVER INITIATION OBJECT CONTACTED

(00) No rollover
(01-30) — Vehicle Number

Noncollision
(31) Turn-over — fall-over
(33) Jackknife

Collision With Fixed Object
(41) Tree (≤ 4 inches in diameter)
(42) Tree (> 4 inches in diameter)
(43) Shrubbery or bush
(44) Embankment

(45) Breakaway pole or post (any diameter)

Nonbreakaway Pole or Post
(50) Pole or post (≤ 4 inches in diameter)
(51) Pole or post (> 4 inches but ≤ 12 inches in diameter)
(52) Pole or post (> 12 inches in diameter)
(53) Pole or post (diameter unknown)

(54) Concrete traffic barrier
(55) Impact attenuator
(56) Other traffic barrier (includes guardrail) (specify):_____

(57) Fence
(58) Wall
(59) Building
(60) Ditch or culvert
(61) Ground
(62) Fire hydrant
(63) Curb
(64) Bridge
(68) Other fixed object (specify):
_____
(69) Unknown fixed object

Collision with Nonfixed Object
(71) Motor vehicle not in-transport
(76) Animal
(77) Train
(78) Trailer, disconnected in transport
(88) Other nonfixed object (specify):
_____
(89) Unknown nonfixed object

(98) Other event (specify):
_____
(99) Unknown event or object

U.S. Department of Transportation
National Highway Traffic Safety Administration

EXTERIOR VEHICLE FORM

NATIONAL ACCIDENT SAMPLING SYSTEM
CRASHWORTHINESS DATA SYSTEM

1. Primary Sampling Unit Number 0 9
2. Case Number - Stratum 5 0 6 A
3. Vehicle Number 0 2

[redacted] 93
1330 AR

VEHICLE IDENTIFICATION

VIN 1 G 1 L V 1 4 W 0 K [redacted] Model Year 8 9

Vehicle Make (specify): CHEVROLET Vehicle Model (specify): BERETTA

LOCATOR

Locate the end of the damage with respect to the vehicle longitudinal center line or bumper corner for end impacts or an undamaged axle for side impacts.

Specific Impact No.	Location of Direct Damage	Location of Field L

CRUSH PROFILE

NOTES: Identify the plane at which the C-measurements are taken (e.g., at bumper, above bumper, at sill, above sill, etc.) and label adjustments (e.g., free space).

Measure and document on the vehicle diagram the location of maximum crush.

Measure C1 to C6 from driver to passenger side in front or rear impacts and rear to front in side impacts.

Free space value is defined as the distance between the baseline and the original body contour taken at the individual C locations. This may include the following: bumper lead, bumper taper, side protrusion, side taper, etc. Record the value for each C-measurement and maximum crush.

Use as many lines/columns as necessary to describe each damage profile.

Specific Impact Number	Plane of Impact C-Measurements	Direct Damage		Field L	C_1	C_2	C_3	C_4	C_5	C_6	±D
		Width (CDC)	Max Crush								

REPAIRS COMPLETE

HS Form 435A (Rev. 1/92)

09-506A
V2

VEHICLE DAMAGE SKETCH

TIRE—WHEEL DAMAGE

a. Rotation physically restricted

RF ___
LF ___
RR ___
LR ___

b. Tire deflated

RF ___
LF ___
RR ___
LR ___

(1) Yes (2) No (8) NA (9) Unk.

TYPE OF TRANSMISSION

☐ Manual ☑ Automatic

ORIGINAL SPECIFICATIONS

Wheelbase	103.9
Overall Length	187.2
Maximum Width	68.2
Curb Weight	2631
Average Track	
Front Overhang	
Rear Overhang	
Engine Size: cyl./ displ.	I4
Undeformed End Width	

WHEEL STEER ANGLES

(For locked front wheels or displaced rear axles only)

RF ± ___ ___ °
LF ± ___ ___ °
RR ± ___ ___ °
LR ± ___ ___ °

Within ±5 degrees

DRIVE WHEELS

☑ FWD ☐ RWD ☐ 4WD

Approximate Cargo Weight ___

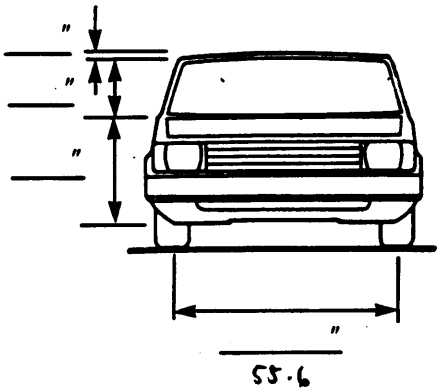

Original Bumper height

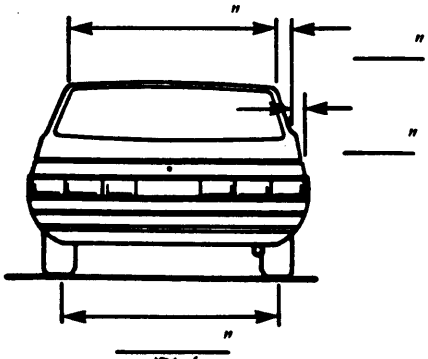

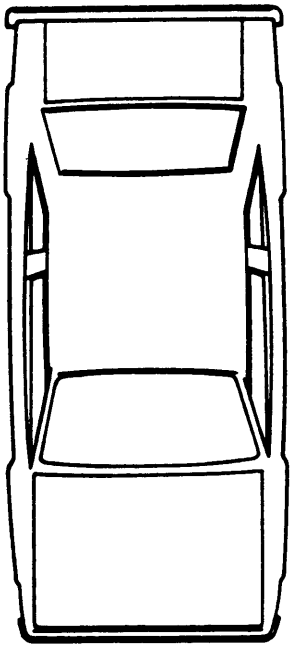

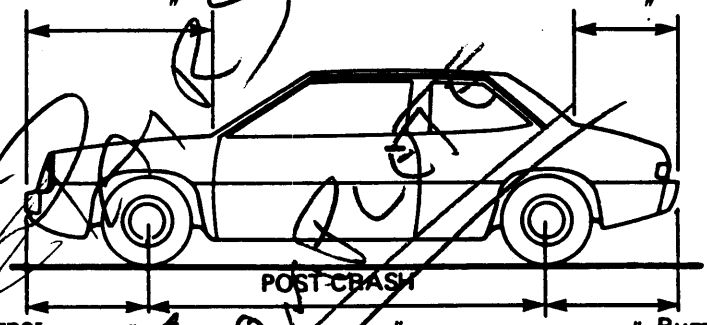

Bumper corner ___ " ___ " ___ " Bumper corner
Stringline ___ " ___ " Stringline

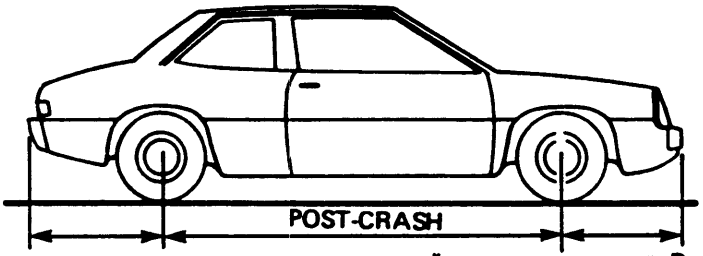

Bumper corner ___ " ___ " ___ " Bumper corner
Stringline ___ " ___ " Stringline

NOTES: Sketch new perimeter and cross hatch direct damage and single hatch induced damage on all views. Annotate observations which might be useful in reconstructing the accident (e.g., grass in tire bead, direction of striations, scuff on sidewall, etc.). If pulling trailer, sketch type of trailer and damage received on the back of this page.
Annotate any damage caused by extrication such as component removal by torching, prying, or hydraulic shears.

CDC WORKSHEET

CODES FOR OBJECT CONTACTED

(01-30) — Vehicle Number

Noncollision
- (31) Overturn — rollover
- (32) Fire or explosion
- (33) Jackknife
- (34) Other intraunit damage (specify): _____
- (35) Noncollision injury
- (38) Other noncollision (specify): _____
- (39) Noncollision — details unknown

Collision With Fixed Object
- (41) Tree (≤ 4 inches in diameter)
- (42) Tree (> 4 inches in diameter)
- (43) Shrubbery or bush
- (44) Embankment
- (45) Breakaway pole or post (any diameter)

Nonbreakaway Pole or Post
- (50) Pole or post (≤ 4 inches in diameter)
- (51) Pole or post (> 4 inches but ≤ 12 inches in diameter)
- (52) Pole or post (> 12 inches in diameter)
- (53) Pole or post (diameter unknown)
- (54) Concrete traffic barrier
- (55) Impact attenuator
- (56) Other traffic barrier (includes guardrail) (specify): _____
- (57) Fence
- (58) Wall
- (59) Building
- (60) Ditch or culvert
- (61) Ground
- (62) Fire hydrant
- (63) Curb
- (64) Bridge
- (68) Other fixed object (specify): _____
- (69) Unknown fixed object

Collision with Nonfixed Object
- (71) Motor vehicle not in-transport
- (72) Pedestrian
- (73) Cyclist or cycle
- (74) Other nonmotorist or conveyance _____
- (75) Vehicle occupant
- (76) Animal
- (77) Train
- (78) Trailer, disconnected in transport
- (88) Other nonfixed object (specify): _____
- (89) Unknown nonfixed object
- (98) Other event (specify): _____
- (99) Unknown event or object

DEFORMATION CLASSIFICATION BY EVENT NUMBER

Accident Event Sequence Number	Object Contacted	(1) (2) Direction of Force (degrees)	Incremental Value of Shift	(3) Deformation Location	(4) Specific Longitudinal or Lateral Location	(5) Specific Vertical or Lateral Location	(6) Type of Damage Distribution	(7) Deformation Extent
1	1	999	00	L	D	E	S	99
					PER	REPAIR FACILITY		

U.S. Department of Transportation
National Highway Traffic Safety Administration

INTERIOR VEHICLE FORM

NATIONAL ACCIDENT SAMPLING SYSTEM
CRASHWORTHINESS DATA SYSTEM

1. Primary Sampling Unit Number 09
2. Case Number - Stratum 5 0 6 A
3. Vehicle Number 0 2

INTEGRITY

4. Passenger Compartment Integrity 0 6
   (00) No integrity loss

   Yes, Integrity Was Lost Through
   (01) Windshield
   (02) Door (side)
   (03) Door/hatch (back door)
   (04) Roof
   (05) Roof glass
   (06) Side window
   (07) Rear window (backlight)
   (08) Roof and roof glass
   (09) Windshield and door (side)
   (10) Windshield and roof
   (11) Side and rear window (side window and backlight)
   (12) Windshield and side window
   (13) Door and side window
   (98) Other combination of above (specify): _____
   (99) Unknown

Door, Tailgate or Hatch Opening

5. LF 1 6. RF 1 7. LR 0 8. RR 0 9. TG/H 0

(0) No door/gate/hatch
(1) Door/gate/hatch remained closed and operational
(2) Door/gate/hatch came open during collision
(3) Door/gate/hatch jammed shut
(8) Other (specify): _____
(9) Unknown

Damage/Failure Associated with Door, Tailgate or Hatch Opening in Collision. If IV05-IV09 ≠ 2, Then code Ø

10. LF 0 11. RF 0 12. LR 0 13. RR 0 14. TG/H 0

(0) No door/gate/hatch or door not opened

Door, Tailgate or Hatch Came Open During Collision
(1) Door operational (no damage)
(2) Latch/striker failure due to damage
(3) Hinge failure due to damage
(4) Door structure failure due to damage
(5) Door support (i.e., pillar, sill, roof side rail, etc.) failure due to damage
(6) Latch/striker and hinge failure due to damage
(8) Other failure (specify): _____
(9) Unknown

GLAZING

Glazing Damage from Impact Forces

15. WS 0 16. LF 0 17. RF 0 18. LR 0 19. RR 0
20. BL 0 21. Roof 8 22. Other 8

(0) No glazing damage from impact forces
(2) Glazing in place and cracked from impact forces
(3) Glazing in place and holed from impact forces
(4) Glazing out-of-place (cracked or not) and not holed from impact forces
(5) Glazing out-of-place and holed from impact forces
(6) Glazing disintegrated from impact forces
(7) Glazing removed prior to accident
(8) No glazing
(9) Unknown if damaged

Glazing Damage from Occupant Contact

23. WS 0 24. LF 0 25. RF 0 26. LR 0 27. RR 0
28. BL 0 29. Roof 0 30. Other 0

(0) No occupant contact to glazing or no glazing
(1) Glazing contacted by occupant but no glazing damage
(2) Glazing in place and cracked by occupant contact
(3) Glazing in place and holed by occupant contact
(4) Glazing out-of-place (cracked or not) by occupant contact and not holed by occupant contact
(5) Glazing out-of-place by occupant contact and holed by occupant contact
(6) Glazing disintegrated by occupant contact
(9) Unknown if contacted by occupant

If No Glazing Damage *And* No Occupant Contact or No Glazing, Then Code IV31 Through IV46 As Ø

Type of Window/Windshield Glazing

31. WS 0 32. LF 0 33. RF 0 34. LR 0 35. RR 0
36. BL 0 37. Roof 0 38. Other 0

(0) No glazing contact and no damage, or no glazing
(1) AS-1 — Laminated
(2) AS-2 — Tempered
(3) AS-3 — Tempered-tinted
(4) AS-14 — Glass/Plastic
(8) Other (specify): _____
(9) Unknown

Window Precrash Glazing Status

39. WS 0 40. LF 0 41. RF 0 42. LR 0 43. RR 0
44. BL 0 45. Roof 0 46. Other 0

(0) No glazing contact and no damage, or no glazing
(1) Fixed
(2) Closed
(3) Partially opened
(4) Fully opened
(9) Unknown

INTRUSION WORKSHEET

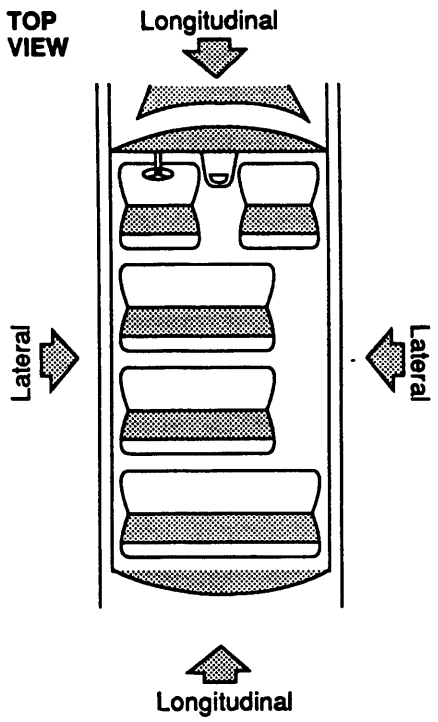

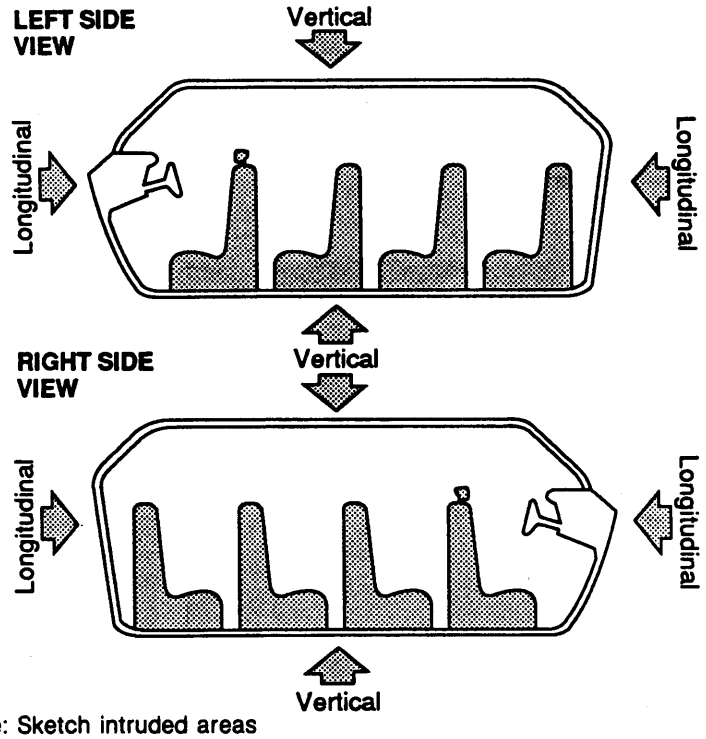

Note: Sketch intruded areas

LOCATION OF INTRUSION	INTRUDED COMPONENT	COMPARISON VALUE	–	INTRUDED VALUE	=	INTRUSION	DOMINANT CRUSH DIRECTION
			–		=		
			–		=		
			–		=		
			–		=		
			–		=		
			–		=		
			–		=		
			–		=		
			–		=		
			–		=		
			–		=		
			–		=		
			–		=		
			–		=		
			–		=		
			–		=		

Document no more than the 15 most severe intrusions

OCCUPANT AREA INTRUSION

Note: If no intrusions, leave variables IV47-IV86 blank.

	Location of Intrusion	Intruding Component	Magnitude of Intrusion	Dominant Crush Direction
1st	47.___ ___	48.___ ___	49.___	50.___
2nd	51.___ ___	52.___ ___	53.___	54.___
3rd	55.___ ___	56.___ ___	57.___	58.___
4th	59.___ ___	60.___ ___	61.___	62.___
5th	63.___ ___	64.___ ___	65.___	66.___
6th	67.___ ___	68.___ ___	69.___	70.___
7th	71.___ ___	72.___ ___	73.___	74.___
8th	75.___ ___	76.___ ___	77.___	78.___
9th	79.___ ___	80.___ ___	81.___	82.___
10th	83.___ ___	84.___ ___	85.___	86.___

None

LOCATION OF INTRUSION

Front Seat
- (11) Left
- (12) Middle
- (13) Right

Second Seat
- (21) Left
- (22) Middle
- (23) Right

Third Seat
- (31) Left
- (32) Middle
- (33) Right

Fourth Seat
- (41) Left
- (42) Middle
- (43) Right

- (97) Catastrophic
- (98) Other enclosed area (specify) _____
- (99) Unknown

INTRUDING COMPONENT

Interior Components
- (01) Steering assembly
- (02) Instrument panel left
- (03) Instrument panel center
- (04) Instrument panel right
- (05) Toe pan
- (06) A-pillar
- (07) B-pillar
- (08) C-pillar
- (09) D-pillar
- (10) Door panel (side)
- (12) Roof (or convertible top)
- (13) Roof side rail
- (14) Windshield
- (15) Windshield header
- (16) Window frame
- (17) Floor pan (includes sill)
- (18) Backlight header
- (19) Front seat back
- (20) Second seat back
- (21) Third seat back
- (22) Fourth seat back
- (23) Fifth seat back
- (24) Seat cushion
- (25) Back door/panel (e.g., tailgate)
- (26) Other interior component (specify): _____
- (27) Side panel - forward of the A-pillar
- (28) Side panel - rear of the A-pillar

Exterior Components
- (30) Hood
- (31) Outside surface of this vehicle (specify): _____
- (32) Other exterior object in the environment (specify): _____
- (33) Unknown exterior object
- (97) Catastrophic
- (98) Intrusion of unlisted component(s) (specify): _____
- (99) Unknown

MAGNITUDE OF INTRUSION

- (1) ≥ 1 inch but < 3 inches
- (2) ≥ 3 inches but < 6 inches
- (3) ≥ 6 inches but < 12 inches
- (4) ≥ 12 inches but < 18 inches
- (5) ≥ 18 inches but < 24 inches
- (6) ≥ 24 inches
- (7) Catastrophic
- (9) Unknown

DOMINANT CRUSH DIRECTION

- (1) Vertical
- (2) Longitudinal
- (3) Lateral
- (7) Catastrophic
- (9) Unknown

STEERING RIM/SPOKE DEFORMATION

COMPARISON VALUE	—	DAMAGE VALUE	=	DEFORMATION
	—		=	
	—		=	
	—		=	
	—		=	

STEERING COLUMN

87. Steering Column Type 1
(1) Fixed column
(2) Tilt column
(3) Telescoping column
(4) Tilt and telescoping column
(8) Other column type (specify): _____
(9) Unknown

88. Blank X X
(This variable is left blank so that numbering consistency can be maintained with the 1988-91 CDS.

89. Blank X X X
(This variable is left blank so that numbering consistency can be maintained with the 1988-91 CDS.

90. Blank X X X
(This variable is left blank so that numbering consistency can be maintained with the 1988-91 CDS.

91. Blank X X X
(This variable is left blank so that numbering consistency can be maintained with the 1988-91 CDS.

92. Steering Rim/Spoke Deformation 0
____Code actual measured deformation to the nearest inch.
(0) No steering rim deformation
(1-5) Actual measured value
(6) 6 inches or more
(8) Observed deformation cannot be measured
(9) Unknown

93. Location of Steering Rim/Spoke Deformation 0 0
(00) No steering rim deformation

Quarter Sections
(01) Section A
(02) Section B
(03) Section C
(04) Section D

Half Sections
(05) Upper half of rim/spoke
(06) Lower half of rim/spoke
(07) Left half of rim/spoke
(08) Right half of rim/spoke

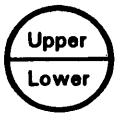

(09) Complete steering wheel collapse
(10) Undetermined location
(99) Unknown

INSTRUMENT PANEL

94. Odometer Reading 0 4 3 ,000
42504 miles—Code mileage to the nearest 1,000 miles
(000) No odometer
(001) Less than 1,500 miles
(300) 299,500 miles or more
(999) Unknown

Source: [redacted]

95. Instrument Panel Damage from Occupant Contact? 0
(0) No
(1) Yes
(9) Unknown

96. Knee Bolsters Deformed from Occupant Contact? 8
(0) No
(1) Yes
(8) Not present
(9) Unknown

97. Did Glove Compartment Door Open During Collision(s)? 0
(0) No
(1) Yes
(8) Not present
(9) Unknown

VEHICLE INTERIOR SKETCHES

Note area of ejection/entrapment

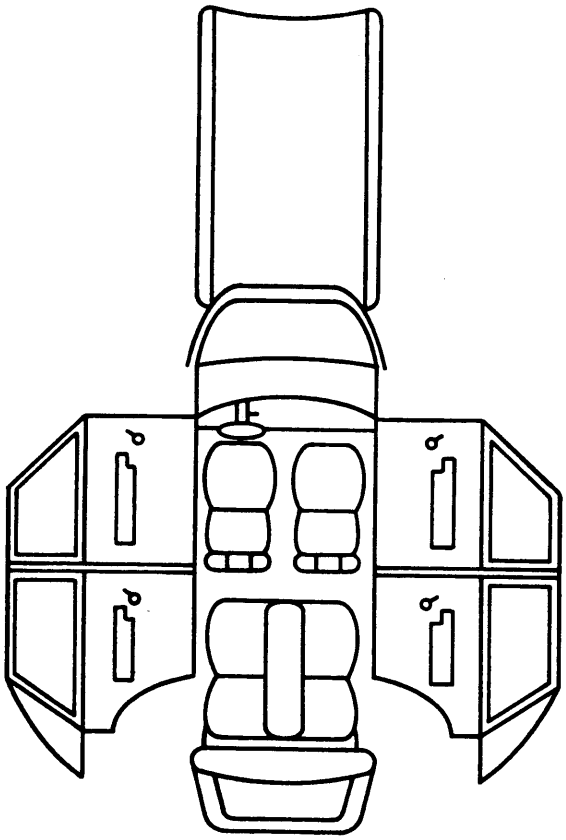

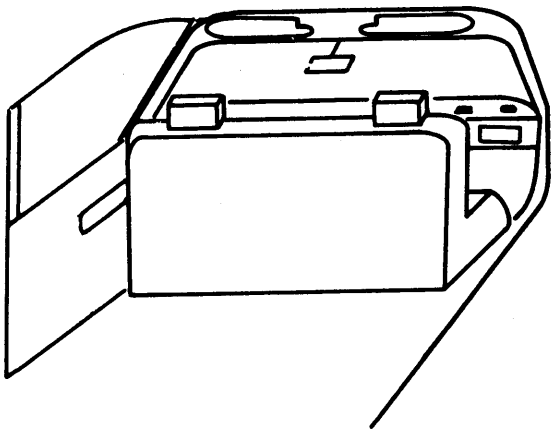

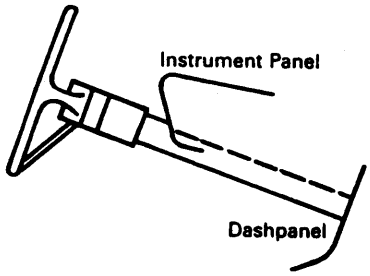

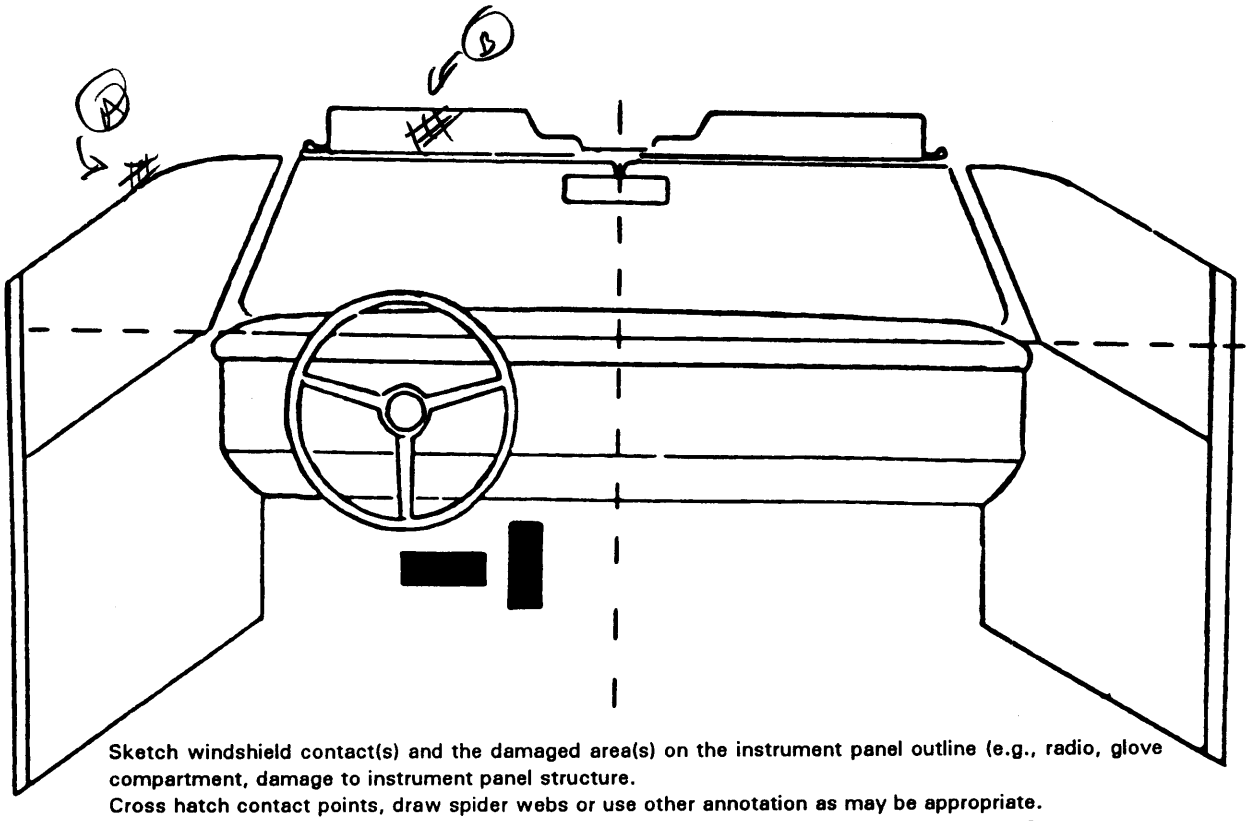

Sketch windshield contact(s) and the damaged area(s) on the instrument panel outline (e.g., radio, glove compartment, damage to instrument panel structure.
Cross hatch contact points, draw spider webs or use other annotation as may be appropriate.
Annotate the contacted area with a letter (begin with A) and list on the Points of Occupant Contact page.

POINTS OF OCCUPANT CONTACT

Contact	Interior Component Contacted	Occupant No. If Known	Body Region If Known	Supporting Physical Evidence	Confidence Level of Contact Point
A	52	1	Head	SMUDGE	2
B	03	1	"	Dirt Transfers	3
C					
D					
E					
F					
G					
H					
I					
J					
K					
L					
M					
N					

CODES FOR INTERIOR COMPONENTS

FRONT
- (01) Windshield
- (02) Mirror
- (03) Sunvisor
- (04) Steering wheel rim
- (05) Steering wheel hub/spoke
- (06) Steering wheel (combination of codes 04 and 05)
- (07) Steering column, transmission selector lever, other attachment
- (08) Add on equipment (e.g., CB, tape deck, air conditioner)
- (09) Left instrument panel and below
- (10) Center instrument panel and below
- (11) Right instrument panel and below
- (12) Glove compartment door
- (13) Knee bolster
- (14) Windshield including one or more of the following: front header, A-pillar, instrument panel, mirror, or steering assembly (driver side only)
- (15) Windshield including one or more of the following: front header, A-pillar, instrument panel, or mirror (passenger side only)
- (16) Other front object (specify): _____

LEFT SIDE
- (20) Left side interior surface, excluding hardware or armrests
- (21) Left side hardware or armrest
- (22) Left A pillar
- (23) Left B pillar
- (24) Other left pillar (specify): _____
- (25) Left side window glass or frame
- (26) Left side window glass including one or more of the following: frame, window sill, A pillar, B pillar, or roof side rail.
- (27) Other left side object (specify): _____
- (28) Left side window sill

RIGHT SIDE
- (30) Right side interior surface, excluding hardware or armrests
- (31) Right side hardware or armrest
- (32) Right A pillar
- (33) Right B pillar
- (34) Other right pillar (specify): _____
- (35) Right side window glass or frame
- (36) Right side window glass including one or more of the following: frame, window sill, A pillar, B pillar, or roof side rail.
- (37) Other right side object (specify): _____
- (38) Right side window sill

INTERIOR
- (40) Seat, back support
- (41) Belt restraint webbing/buckle
- (42) Belt restraint B-pillar attachment point
- (43) Other restraint system component (specify): _____
- (44) Head restraint system
- (45) Air bag
- (46) Other occupants (specify): _____
- (47) Interior loose objects
- (48) Child safety seat (specify): _____
- (49) Other interior object (specify): _____

ROOF
- (50) Front header
- (51) Rear header
- (52) Roof left side rail
- (53) Roof right side rail
- (54) Roof or convertible top

FLOOR
- (56) Floor (including toe pan)
- (57) Floor or console mounted transmission lever, including console
- (58) Parking brake handle
- (59) Foot controls including parking brake

REAR
- (60) Backlight (rear window)
- (61) Backlight storage rack, door, etc.
- (62) Other rear object (specify): _____

CONFIDENCE LEVEL OF CONTACT POINT
- (1) Certain
- (2) Probable
- (3) Possible
- (9) Unknown

AUTOMATIC RESTRAINTS

NOTES: Encode the data for each applicable front seat position. The attribute for the variables may be found below. Restraint systems should be assessed during the vehicle inspection then coded on the Occupant Assessment Form.

AIR BAGS

		Left	Right
FIRST	Availability/Function		
	Deployment		
	Failure		

Air Bag System Availability/Function
(0) Not equipped/not available
(1) Air bag

Non-functional
(2) Air bag disconnected (specify): _____
(3) Air bag not reinstalled
(9) Unknown

Air Bag System Deployment
(0) Not equipped/not available
(1) Air bag deployed during accident (as a result of impact)
(2) Air bag deployed inadvertently just prior to accident
(3) Air bag deployed, accident sequence undetermined
(4) Nondeployed
(5) Unknown if deployed
(6) Air bag deployed as a result of a noncollision event during accident sequence (e.g., fire, explosion, electrical)
(9) Unknown

Did Air Bag System Fail?
(0) Not equipped/not available
(1) No
(2) Yes (specify): _____
(9) Unknown

AUTOMATIC BELTS

		Left	Right
FIRST	Availability/Function	2	2
	Use	1	1
	Type	1	1
	Proper Use	1	1
	Failure Modes	1	1

Automatic (Passive) Belt System Availability/Function
(0) Not equipped/not available
(1) 2 point automatic belts
(2) 3 point automatic belts
(3) Automatic belts - type unknown

Non-functional
(4) Automatic belts destroyed or rendered inoperative
(9) Unknown

Automatic (Passive) Belt System Use
(0) Not equipped/not available/destroyed or rendered inoperative
(1) Automatic belt in use
(2) Automatic belt not in use (manually disconnected, motorized track inoperative)
(3) Automatic belt use unknown
(9) Unknown

Automatic (Passive) Belt System Type
(0) Not equipped/not available
(1) Non-motorized system
(2) Motorized system
(9) Unknown

Proper Use of Automatic (Passive) Belt System
(0) Not equipped/not available/not used
(1) Automatic belt used properly
(2) Automatic belt used properly with child safety seat

Automatic Belt Used Improperly
(3) Automatic shoulder belt worn under arm
(4) Automatic shoulder belt worn behind back
(5) Automatic belt worn around more than one person
(6) Lap portion of automatic belt worn on abdomen
(7) Automatic lap and shoulder belt or automatic shoulder belt used improperly with child safety seat (specify): _____
(8) Other improper use of automatic belt system (specify): _____
(9) Unknown

Automatic (Passive) Belt Failure Modes During Accident
(0) Not equipped/not available/not in use
(1) No automatic belt failure(s)
(2) Torn webbing (stretched webbing not included)
(3) Broken buckle or latchplate
(4) Upper anchorage separated
(5) Other anchorage separated (specify): _____
(6) Broken retractor
(7) Combination of above (specify):
(8) Other automatic belt failure (specify): _____
(9) Unknown

MANUAL RESTRAINTS

NOTES: Encode the applicable data for each seat position in the vehicle. The attribute for the variable may be found below. Restraint systems should be assessed during the vehicle inspection then coded on the Ocupant Assessment Form.

If a Child safety seat is present, encode the data on the back of this page.

If the vehicle has automatic restraints available, encode the appropriate data on the back of the previous page.

		Left	Center	Right
FIRST	Availability	0		0
	Use	00		00
	Failure Modes	0		0
SECOND	Availability	4	3	4
	Use	00	00	00
	Failure Modes	0	0	0
THIRD	Availability			
	Use			
	Failure Modes			
OTHER	Availability			
	Use			
	Failure Modes			

Manual (Active) Belt System Availability

(0) None available
(1) Belt removed/destroyed
(2) Shoulder belt
(3) Lap belt
(4) Lap and shoulder belt
(5) Belt available - type unknown

Integral Belt Partially Destroyed

(6) Shoulder belt (lap belt destroyed/removed)
(7) Lap belt (shoulder belt destroyed/removed)

(8) Other belt (specify): _____

(9) Unknown

Manual (Active) Belt System Use

(00) None used, not available, or belt removed/destroyed
(01) Inoperable (specify): _____
(02) Shoulder belt
(03) Lap belt
(04) Lap and shoulder belt
(05) Belt used - type unknown
(08) Other belt used (specify): _____
(12) Shoulder belt used with child safety seat
(13) Lap belt used with child safety seat
(14) Lap and shoulder belt used with child safety seat
(15) Belt used with child safety seat - type unknown
(18) Other belt used with child safety seat (specify): _____
(99) Unknown if belt used

Manual (Active) Belt Failure Modes During Accident

(0) No manual belt used or not available
(1) No manual belt failure(s)
(2) Torn webbing (stretched webbing not included)
(3) Broken buckle or latchplate
(4) Upper anchorage separated
(5) Other anchorage separated (specify): _____
(6) Broken retractor
(7) Combination of above (specify): _____
(8) Other manual belt failure (specify): _____
(9) Unknown

CHILD SAFETY SEAT FIELD ASSESSMENT

When a child safety seat is present enter the occupant's number in the first row and complete the column below the occupant's number using the codes listed below. Complete a column for each child safety seat present.

Occupant Number						
1. Type of Child Safety Seat						
2. Child Safety Seat Orientation						
3. Child Safety Seat Harness Usage						
4. Child Safety Seat Shield Uasge						
5. Child Safety Seat Tether Usage						
6. Child Safety Seat Make/Model	Specify Below for Each Child Safety Seat					

1. Type of Child Safety Seat
   - (0) No child safety seat
   - (1) Infant seat
   - (2) Toddler seat
   - (3) Convertible seat
   - (4) Booster seat
   - (7) Other type child safety seat (specify): _____
   - (8) Unknown child safety seat type
   - (9) Unknown if child safety seat used

2. Child Safety Seat Orientation
   - (00) No child safety seat

   Designed for Rear Facing for This Age/Weight
   - (01) Rear facing
   - (02) Forward facing
   - (08) Other orientation (specify): _____
   - (09) Unknown orientation

   Designed for Forward Facing for This Age/Weight
   - (11) Rear facing
   - (12) Forward facing
   - (18) Other orientation (specify): _____
   - (19) Unknown orientation

   Unknown Design or Orientation For This Age/Weight, or Unknown Age/Weight
   - (21) Rear facing
   - (22) Forward facing
   - (28) Other orientation (specify): _____
   - (29) Unknown orientation

   - (99) Unknown if child safety seat used

3. Child Safety Seat Harness Usage

4. Child Safety Seat Shield Usage

5. Child Safety Seat Tether Usage
   Note: Options Below Are Used for Variables 3-5.
   - (00) No child safety seat

   Not Designed with Harness/Shield/Tether
   - (01) After market harness/shield/tether added, not used
   - (02) After market harness/shield/tether used
   - (03) Child safety seat used, but no after market harness/shield/tether added
   - (09) Unknown if harness/shield/tether added or used

   Designed With Harness/Shield/Tether
   - (11) Harness/shield/tether not used
   - (12) Harness/shield/tether used
   - (19) Unknown if harness/shield/tether used

   Unknown If Designed With Harness/Shield/Tether
   - (21) Harness/shield/tether not used
   - (22) Harness/shield/tether used
   - (29) Unknown if harness/shield/tether used

   - (99) Unknown if child safety seat used

6. Child Safety Seat Make/Model
   (Specify make/model and occupant number)

   _____
   _____
   _____
   _____

HEAD RESTRAINTS/SEAT EVALUATION

NOTES: Encode the applicable data for each seat position in the vehicle. The attribute for these variables may be found at the bottom of the page. Head restraint type/damage and seat type/performance should be assessed during the vehicle inspection then coded on the Occupant Assessment Form.

		Left	Center	Right
FIRST	Head Restraint Type/Damage	3	0	3
	Seat Type	02		02
	Seat Performance	1		1
	Seat Orientation	1		1
SECOND	Head Restraint Type/Damage	0	0	6
	Seat Type	03	03	03
	Seat Performance	1	1	1
	Seat Orientation	1	1	1
THIRD	Head Restraint Type/Damage			
	Seat Type			
	Seat Performance			
	Seat Orientation			
OTHER	Head Restraint Type/Damage			
	Seat Type			
	Seat Performance			
	Seat Orientation			

Head Restraint Type/Damage by Occupant at This Occupant Position

(0) No head restraints
(1) Integral — no damage
(2) Integral — damaged during accident
(3) Adjustable — no damage
(4) Adjustable — damaged during accident
(5) Add-on — no damage
(6) Add-on — damaged during accident
(8) Other Specify): _____
(9) Unknown

Seat Type (this Occupant Position)

(00) No seat
(01) Bucket
(02) Bucket with folding back
(03) Bench
(04) Bench with separate back cushions
(05) Bench with folding back(s)
(06) Split bench with separate back cushions
(07) Split bench with folding back(s)
(08) Pedestal (i.e., column supported)
(09) Other seat type (specify): _____
(10) Box mounted seat (i.e., van type)
(99) Unknown

Seat Performance (this Occupant Position)

(0) No seat
(1) No seat performance failure(s)
(2) Seat adjusters failed
(3) Seat back folding locks or "seat back" failed specify: _____
(4) Seat tracks/anchors failed
(5) Deformed by impact of occupant
(6) Deformed by passenger compartment intrusion (specify): _____
(7) Combination of above (specify): _____
(8) Other (specify): _____
(9) Unknown

Seat Orientation (this Occupant Position)

(0) No seat
(1) Forward facing seat
(2) Rear facing seat
(3) Side facing seat (inward)
(4) Side facing seat (outward)
(8) Other (specify): _____
(9) Unknown

DESCRIBE ANY INDICATION OF ABNORMAL OCCUPANT POSTURE (I.E., UNUSUAL OCCUPANT CONTACT PATTERN)

NONE

EJECTION/ENTRAPMENT DATA

Complete the following if the researcher has any indication that an occupant was either ejected from or entrapped in the vehicle. Code the appropriate data on the Occpant Assessment Form.

EJECTION No [X] Yes [ ]

Describe indications of ejection and body parts involved in partial ejection(s):

Occupant Number						
Ejection						
(Note on Vehicle Interior Sketch) Ejection Area						
Ejection Medium						
Medium Status						

NONE

Ejection
- (1) Complete ejection
- (1) Partial ejection
- (3) Ejection, Unknown degree
- (9) Unknown

Ejection Area
- (1) Windshield
- (2) Left front
- (3) Right front
- (4) Left rear
- (5) Right rear
- (6) Rear
- (7) Roof
- (8) Other area (e.g., back of pickup, etc.) (specify): _____
- (9) Unknown

Ejection Medium
- (1) Door/hatch/tailgate
- (2) Nonfixed roof structure
- (3) Fixed glazing
- (4) Nonfixed glazing (specify): _____
- (5) Integral structure
- (8) Other medium (specify): _____
- (9) Unknown

Medium Status (Immediately Prior to Impact)
- (1) Open
- (2) Closed
- (3) Integral structure
- (9) Unknown

ENTRAPMENT No [X] Yes [ ]

Describe entrapment mechanism: _____

Component(s): _____

(Note in vehicle interior diagram)

NONE

26. Seat Type (this Occupant Position) 0 2
(00) Occupant not seated or no seat
(01) Bucket
(02) Bucket with folding back
(03) Bench
(04) Bench with separate back cushions
(05) Bench with folding back(s)
(06) Split bench with separate back cushions
(07) Split bench with folding back(s)
(08) Pedestal (i.e., column supported)
(09) Other seat type (specify): _____
(10) Box mounted seat (i.e., van type)
(99) Unknown

27. Seat Performance (this Occupant Position) 1
(0) Occupant not seated or no seat
(1) No seat performance failure(s)
(2) Seat adjusters failed
(3) Seat back folding locks or "seat back" failed
(4) Seat track/anchors failed
(5) Deformed by impact of occupant
(6) Deformed by passenger compartment intrusion (specify): _____
(7) Combination of above (specify): _____
(8) Other (specify): _____
(9) Unknown

CHILD SAFETY SEAT

28. Child Safety Seat Make/Model 0 0 0
(000) No child safety seat
Applicable codes are found in your NASS CDS Data Collection, Coding and Editing
(950) Built-in child safety seat
(997) Other make/model (specify): _____
(998) Unknown make/model
(999) Unknown if child safety seat used

29. Type of Child Safety Seat 0
(0) No child safety seat
(1) Infant seat
(2) Toddler seat
(3) Convertible seat
(4) Booster seat
(7) Other type child safety seat (specify): _____
(8) Unknown child safety seat type
(9) Unknown if child safety seat used

30. Child Safety Seat Orientation 0 0
(00) No child safety seat

Designed for Rear Facing for This Age/Weight
(01) Rear facing
(02) Forward facing
(08) Other orientation (specify): _____
(09) Unknown orientation

Designed For Forward Facing for This Age/Weight
(11) Rear facing
(12) Forward facing
(18) Other orientation (specify): _____
(19) Unknown orientation

Unknown Design or Orientation For This Age/Weight, or Unknown Age/Weight
(21) Rear facing
(22) Forward facing
(28) Other orientation (specify): _____
(29) Unknown orientation

(99) Unknown if child safety seat used

31. Child Safety Seat Harness Usage 0 0

32. Child Safety Seat Shield Usage 0 0

33. Child Safety Seat Tether Usage 0 0
Note: Options below applicable to Variables OA31-OA33.
(00) No child safety seat

Not Designed With Harness/Shield/Tether
(01) After market harness/shield/tether added, not used
(02) After market harness/shield/tether used
(03) Child safety seat used, but no after market harness/shield/tether added
(09) Unknown if harness/shield/tether added or used

Designed With Harness/Shield/Tether
(11) Harness/shield/tether not used
(12) Harness/shield/tether used
(19) Unknown if harness/shield/tether used

Unknown If Designed With Harness/Shield/Tether
(21) Harness/shield/tether not used
(22) Harness/shield/tether used
(29) Unknown if harness/shield/tether used

(99) Unknown if child safety seat used

PSU NUMBER 09

CASE NUMBER 506A

VEHICLE NUMBER 02

OCCUPANT NUMBER 01

OCCUPANT INJURY FORM

THE FOLLOWING DATA IS NOT INCLUDED IN THIS CASE:

[✓] ENTIRE FORM

[] PAGE NUMBER (S) _____

26. Seat Type (this Occupant Position) 0 2
(00) Occupant not seated or no seat
(01) Bucket
(02) Bucket with folding back
(03) Bench
(04) Bench with separate back cushions
(05) Bench with folding back(s)
(06) Split bench with separate back cushions
(07) Split bench with folding back(s)
(08) Pedestal (i.e., column supported)
(09) Other seat type (specify): _____
(10) Box mounted seat (i.e., van type)
(99) Unknown

27. Seat Performance (this Occupant Position) 1
(0) Occupant not seated or no seat
(1) No seat performance failure(s)
(2) Seat adjusters failed
(3) Seat back folding locks or "seat back" failed
(4) Seat track/anchors failed
(5) Deformed by impact of occupant
(6) Deformed by passenger compartment intrusion (specify): _____
(7) Combination of above (specify): _____
(8) Other (specify): _____
(9) Unknown

CHILD SAFETY SEAT

28. Child Safety Seat Make/Model 0 0 0
(000) No child safety seat
Applicable codes are found in your NASS CDS Data Collection, Coding and Editing
(950) Built-in child safety seat
(997) Other make/model (specify): _____
(998) Unknown make/model
(999) Unknown if child safety seat used

29. Type of Child Safety Seat 0
(0) No child safety seat
(1) Infant seat
(2) Toddler seat
(3) Convertible seat
(4) Booster seat
(7) Other type child safety seat (specify): _____
(8) Unknown child safety seat type
(9) Unknown if child safety seat used

30. Child Safety Seat Orientation 0 0
(00) No child safety seat

Designed for Rear Facing for This Age/Weight
(01) Rear facing
(02) Forward facing
(08) Other orientation (specify): _____
(09) Unknown orientation

Designed For Forward Facing for This Age/Weight
(11) Rear facing
(12) Forward facing
(18) Other orientation (specify): _____
(19) Unknown orientation

Unknown Design or Orientation For This Age/Weight, or Unknown Age/Weight
(21) Rear facing
(22) Forward facing
(28) Other orientation (specify): _____
(29) Unknown orientation

(99) Unknown if child safety seat used

31. Child Safety Seat Harness Usage 0 0

32. Child Safety Seat Shield Usage 0 6

33. Child Safety Seat Tether Usage 0 0
Note: Options below applicable to Variables OA31-OA33.
(00) No child safety seat

Not Designed With Harness/Shield/Tether
(01) After market harness/shield/tether added, not used
(02) After market harness/shield/tether used
(03) Child safety seat used, but no after market harness/shield/tether added
(09) Unknown if harness/shield/tether added or used

Designed With Harness/Shield/Tether
(11) Harness/shield/tether not used
(12) Harness/shield/tether used
(19) Unknown if harness/shield/tether used

Unknown If Designed With Harness/Shield/Tether
(21) Harness/shield/tether not used
(22) Harness/shield/tether used
(29) Unknown if harness/shield/tether used

(99) Unknown if child safety seat used

U.S. Department of Transportation
National Highway Traffic Safety Administration

Form Approved
O.M.B. No. 2127-0021
NATIONAL ACCIDENT SAMPLING SYSTEM
CRASHWORTHINESS DATA SYSTEM

OCCUPANT INJURY FORM

1. Primary Sampling Unit Number	0 9	3. Vehicle Number	0 2
2. Case Number - Stratum	5 0 6 A	4. Occupant Number	0 2

INJURY DATA

Record below the actual injuries sustained by this occupant that were identified from the official and unofficial data sources. Remember not to double count an injury just because it was identified from two different sources. If greater than ten injuries have been documented, encode the balance on the Occupant Injury Supplement.

	Source of Injury Data	O.I.C.-A.I.S Body Region	Aspect	Lesion	System Organ	A.I.S. Severity	Injury Source	Injury Source Confidence Level	Direct/ Indirect Injury	Occupant Area Intrusion No.
1st	5. 7	6. K	7. L	8. C	9. I	10. 1	11. 12	12. 1	13. 1	14. 00
2nd	15. 7	16. K	17. R	18. C	19. I	20. 1	21. 12	22. 1	23. 1	24. 00
3rd	25.	26.	27.	28.	29.	30.	31.	32.	33.	34.
4th	35.	36.	37.	38.	39.	40.	41.	42.	43.	44.
5th	45.	46.	47.	48.	49.	50.	51.	52.	53.	54.
6th	55.	56.	57.	58.	59.	60.	61.	62.	63.	64.
7th	65.	66.	67.	68.	69.	70.	71.	72.	73.	74.
8th	75.	76.	77.	78.	79.	80.	81.	82.	83.	84.
9th	85.	86.	87.	88.	89.	90.	91.	92.	93.	94.
10th	95.	96.	97.	98.	99.	100.	101.	102.	103.	104.

HS Form 433B (1/92)

This report is authorized by P.L. 89-563, Title 1, Section 106, 108, and 112. While you are not required to respond, your cooperation is needed to make the results of this data collection effort comprehensive, accurate, and timely.

OCCUPANT INJURY DATA

	Source of Injury Data	O.I.C.-A.I.S					Injury Source	Injury Source Confidence Level	Direct/ Indirect Injury	Occupant Area Intrusion No.
		Body Region	Aspect	Lesion	System Organ	A.I.S. Severity				
11th										
12th										
13th										
14th										
15th										
16th										
17th										
18th										
19th										
20th										
21st										
22nd										
23rd										
24th										
25th										

09-506H
V2 02

OFFICIAL INJURY DATA — SOFT TISSUE INJURIES

Indicate the Location, Lesion, Detail (size, depth, fracture type, head injury clinical signs and neurological deficits), and Source of all injuries indicated by official sources (or from PAR or other unofficial sources if medical records and interviewee data are unavailable.)

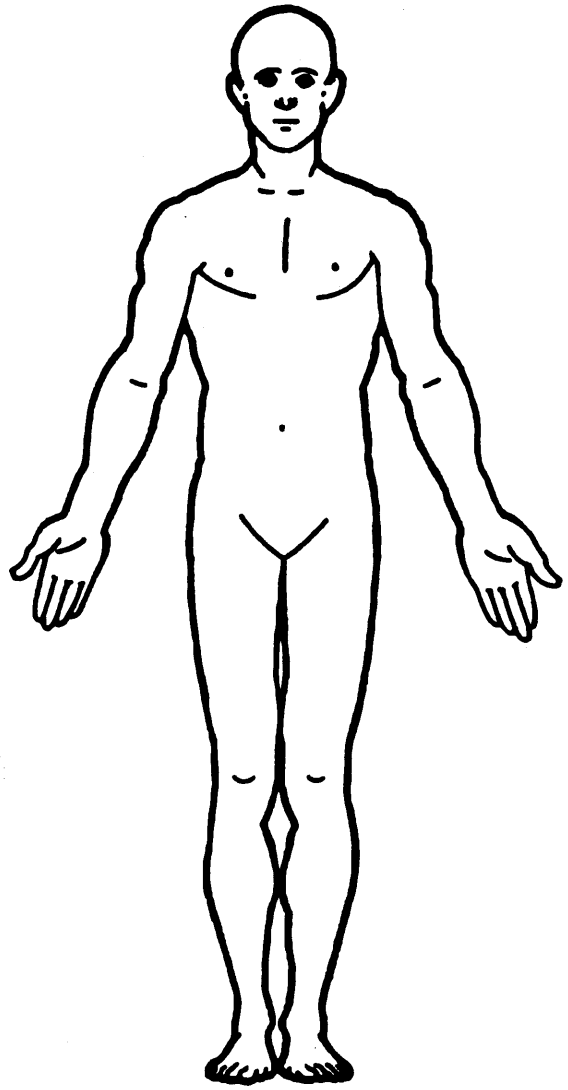

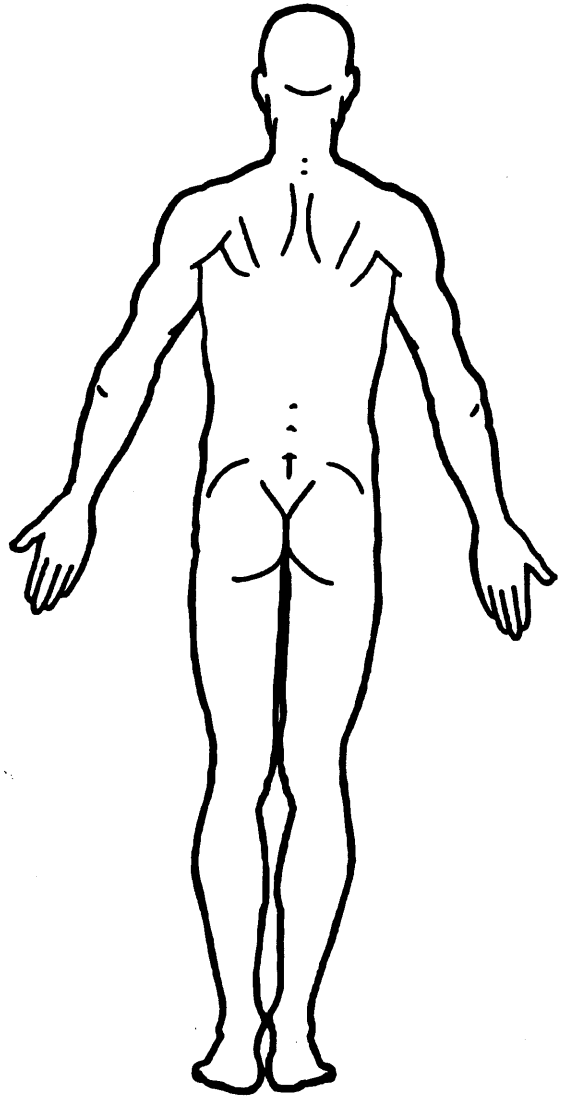

SOURCE OF INJURY DATA

OFFICIAL

(1) Autopsy records with or without hospital medical records
(2) Hospital medical records other than emergency room (e.g., dishcarge summary)
(3) Emergency room records only (including associated X-rays or other lab reports)
(4) Private physician, walk-in or emergency clinic

UNOFFICIAL

(5) Lay coroner report
(6) E.M.S. personnel
(7) Interviewee
(8) Other source (specify): _____
(9) Police

INJURY SOURCE

FRONT

(01) Windshield
(02) Mirror
(03) Sunvisor
(04) Steering wheel rim
(05) Steering wheel hub/spoke
(06) Steering wheel (combination of codes 04 and 05)
(07) Steering column, transmission selector lever, other attachment
(08) Add on equipment (e.g., CB, tape deck, air conditioner)
(09) Left instrument panel and below
(10) Center instrument panel and below
(11) Right instrument panel and below
(12) Glove compartment door
(13) Knee bolster
(14) Windshield including one or more of the following: front header, A-pillar, instrument panel, mirror, or steering assembly (driver side only)
(15) Windshield including one or more of the following: front header, A-pillar, instrument panel, or mirror (passenger side only)
(16) Other front object (specify): _____

LEFT SIDE

(20) Left side interior surface, excluding hardware or armrests
(21) Left side hardware or armrest
(22) Left A pillar
(23) Left B pillar
(24) Other left pillar (specify): _____
(25) Left side window glass or frame
(26) Left side window glass including one or more of the following: frame, window sill, A-pillar, B-pillar, or roof side rail.
(27) Other left side object (specify): _____
(28) Left side window sill

RIGHT SIDE

(30) Right side interior surface, excluding hardware or armrests
(31) Right side hardware or armrest
(32) Right A pillar
(33) Right B pillar
(34) Other right pillar (specify): _____
(35) Right side window glass or frame
(36) Right side window glass including one or more of the following: frame, window sill, A pillar, B pillar, or roof side rail.
(37) Other right side object (specify): _____
(38) Right side window sill

INTERIOR

(40) Seat, back support
(41) Belt restraint webbing/buckle
(42) Belt restraint B-pillar attachment point
(43) Other restraint system component (specify): _____
(44) Head restraint system
(45) Air bag
(46) Other occupants (specify): _____
(47) Interior loose objects
(48) Child safety seat (specify): _____
(49) Other interior object (specify): _____

ROOF

(50) Front header
(51) Rear header
(52) Roof left side rail
(53) Roof right side rail
(54) Roof or convertible top

FLOOR

(56) Floor (including toe pan)
(57) Floor or console mounted transmission lever, including console
(58) Parking brake handle
(59) Foot controls including parking brake

REAR

(60) Backlight (rear window)
(61) Backlight storage rack, door, etc.
(62) Other rear object (specify): _____

EXTERIOR of OCCUPANT'S VEHICLE

(65) Hood
(66) Outside hardware (e.g., outside mirror, antenna)
(67) Other exterior surface or tires (specify): _____
(68) Unknown exterior objects

EXTERIOR OF OTHER MOTOR VEHICLE

(70) Front bumper
(71) Hood edge
(72) Other front of vehicle (specify): _____
(73) Hood
(74) Hood ornament
(75) Windshield, roof rail, A-pillar
(76) Side surface
(77) Side mirrors
(78) Other side protrusions (specify) _____
(79) Rear surface
(80) Undercarriage
(81) Tires and wheels
(82) Other exterior of other motor vehicle (specify): _____
(83) Unknown exterior of other motor vehicle

OTHER VEHICLE OR OBJECT IN THE ENVIRONMENT

(84) Ground
(85) Other vehicle or object (specify) _____
(86) Unknown vehicle or object

NONCONTACT INJURY

(90) Fire in vehicle
(91) Flying glass
(92) Other noncontact injury source (specify): _____
(93) Air bag exhaust gases
(97) Injured, unknown source

INJURY SOURCE CONFIDENCE LEVEL

(1) Certain
(2) Probable
(3) Possible
(9) Unknown

DIRECT/INDIRECT INJURY

(1) Direct contact injury
(2) Indirect contact injury
(3) Noncontact injury
(7) Injured, unknown source

OCCUPANT INJURY CLASSIFICATION

O.I.C. Body Region

(M) Abdomen
(Q) Ankle—foot
(A) Arm (upper)
(B) Back-thoracolumbar spine
(C) Chest
(E) Elbow
(F) Face
(R) Forearm
(H) Head—skull
(U) Injured, unknown region
(K) Knee
(L) Leg (lower)
(Y) Lower limbs(s) (whole or unknown part)
(N) Neck—cervical spine
(P) Pelvic—hip
(S) Shoulder
(T) Thigh
(X) Upper limb(s) (whole or unknown part)
(O) Whole body
(W) Wrist—hand

Aspect of Injury

(A) Anterior—front
(B) Bilateral (rib fracture only)
(C) Central
(I) Inferior—lower
(U) Injured, unknown aspect
(L) Left
(P) Posterior—back
(R) Right
(S) Superior—upper
(W) Whole region

Lesion

(A) Abrasion
(M) Amputation
(V) Avulsion
(B) Burn
(K) Concussion
(C) Contusion
(N) Crush
(G) Detachment, separation
(D) Dislocation
(F) Fracture
(Z) Fracture and dislocation
(U) Injured, unknown lesion
(L) Laceration
(O) Other
(P) Perforation, puncture
(R) Rupture
(S) Sprain
(T) Strain
(E) Total severance, transection

System/Organ

(W) All systems in region
(A) Arteries—veins
(B) Brain
(D) Digestive
(E) Ears
(O) Eye
(H) Heart
(U) Injured, unknown system
(I) Integumentary
(J) Joints
(K) Kidneys
(L) Liver
(M) Muscles
(N) Nervous system
(P) Pulmonary—lungs
(R) Respiratory
(S) Skeletal
(C) Spinal cord
(Q) Spleen
(T) Thyroid, other endocrine gland
(V) Vertebrae

Abbreviated Injury Scale

(1) Minor injury
(2) Moderate injury
(3) Seriour injury
(4) Severe injury
(5) Critical injury
(6) Maximum (untreatable)
(7) Injured, unknown severity

OFFICIAL INJURY DATA — SKELETAL INJURIES

Restrained?

___ No

___ Yes

Blood Alcohol Level (mg/dl)

BAL = ____

Glasgow Coma Scale Score

GCSS = ____

Units of Blood Given

Units = ____

Aterial Blood Gases

pH = __.__

PO_2 = ____

PCO_2 ____

HCO_3 ____

Indicate the Location, Lesion, Detail (size, depth, fracture type, head injury clinical signs and neurological deficits), and Source of all injuries indicated by official sources (or from PAR or other unofficial sources if medical records and interviewee data are unavailable.)

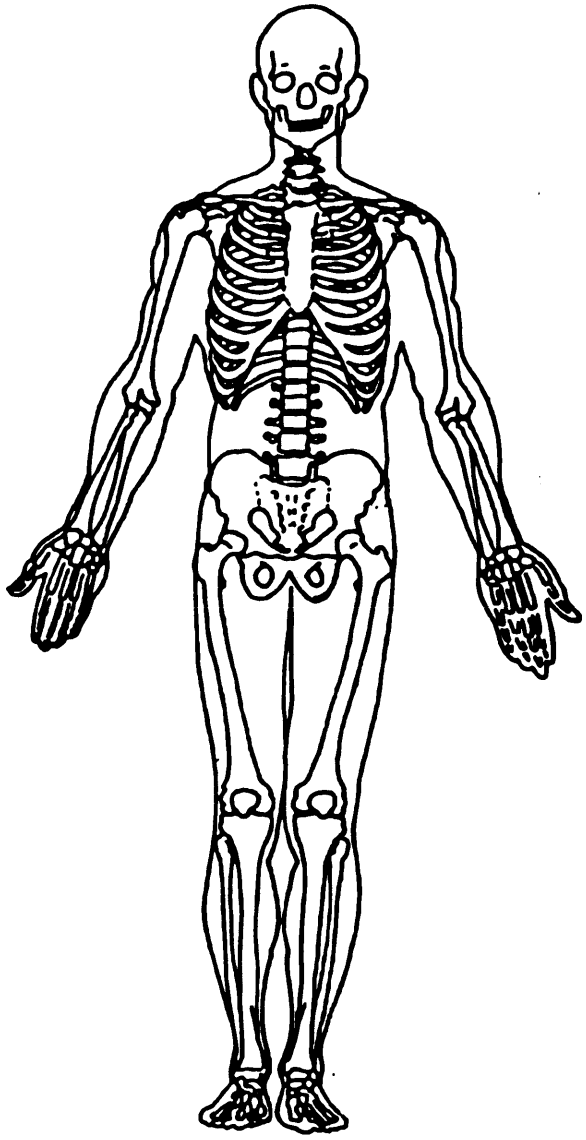

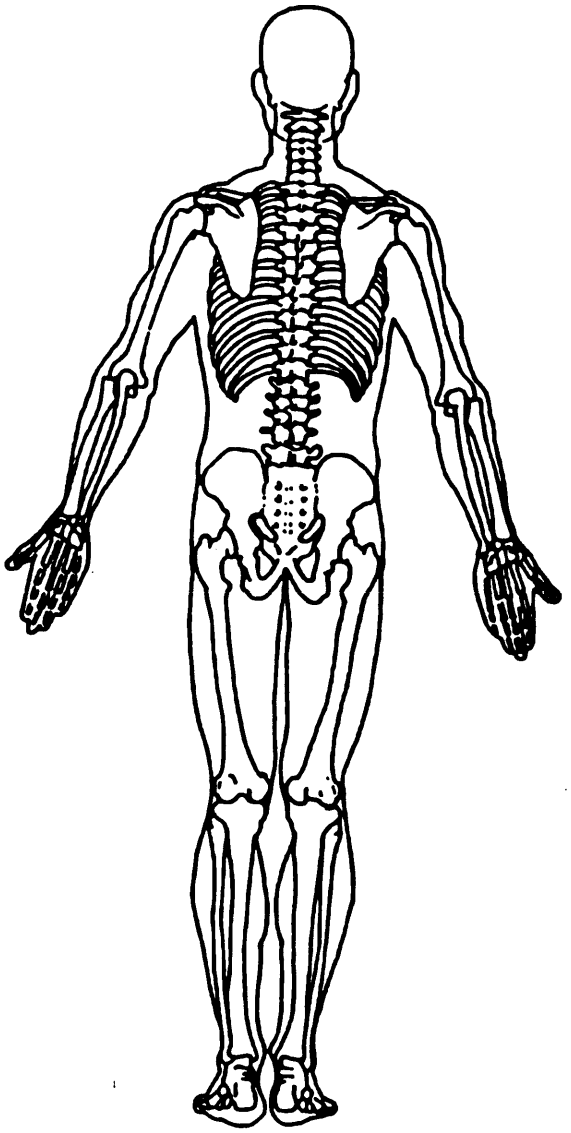

V2 00

09-566A

OFFICIAL INJURY DATA —INTERNAL INJURIES

Indicate the Location, Lesion, Detail (size, depth, fracture type, head injury clinical signs and neurological deficits), and Source of all injuries indicated by official sources (or from PAR or other unofficial sources if medical records and interviewee data are unavailable.)

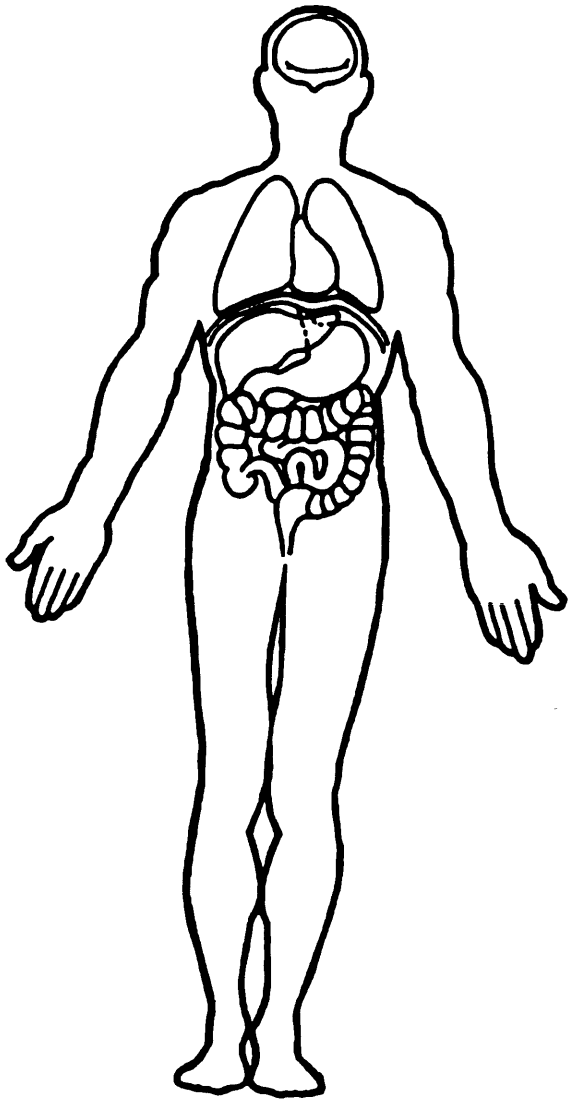

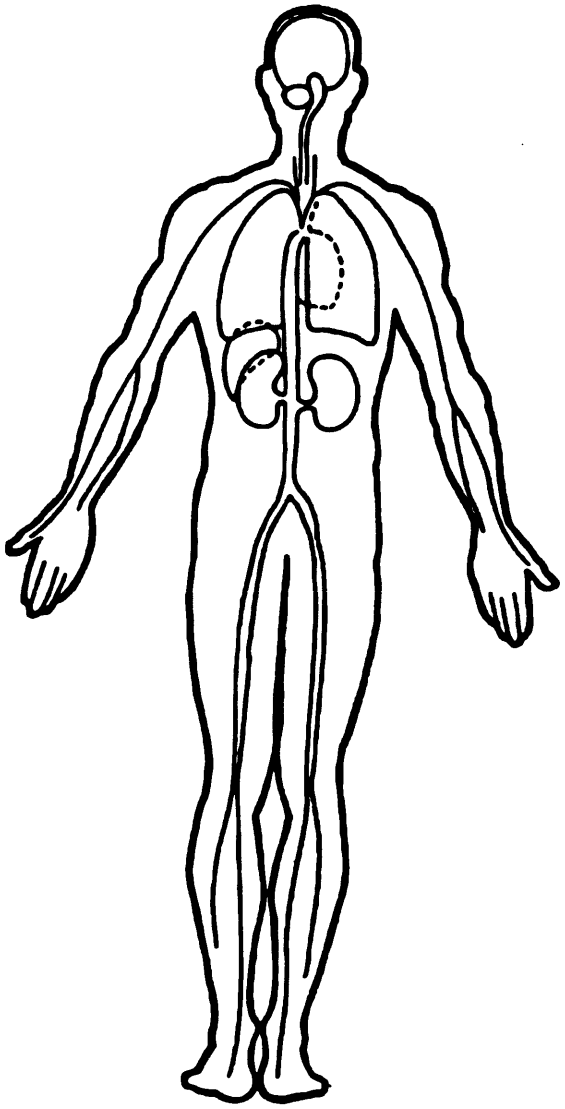

09506A00000011[redacted]925.03000000000002013000100 02[redacted]92[redacted]93[redacted]93[redacted]92010191000
000000000000000
09506A00010012[redacted]925.03100000000000102F0202L
09506A00020012[redacted]925.03100000000000102R56000
09506A01000021 5.03 00000000092490400 44T1SK12E5NU[redacted]199900359946101010 29
000000009989985 99 99 999999021
09506A01000022 5.03 00000000000107070707070207 07[redacted]20000000051199
09506A01000031 5.03 00000000002560 1RDES02010299999999
0110310001
09506A01000041 5.03 00000000006111100000000000800060600000202000002020 00
09506A01000042 5.03 000000000
2 000015100
09506A01010051 5.03 00000000030170173111923420400001410301100000000000004100
062010600001200000101101
09506A01010161 5.03 0000000001FIFS2851100
09506A01010261 5.03 0000000001FWLI1851100
09506A01010361 5.03 0000000001FLLO1851100
09506A01010461 5.03 0000000001FRCO1851100
09506A01010561 5.03 0000000001NRLI1851100
09506A01010661 5.03 0000000001HIFS4851100
09506A01010761 5.03 0000000001HPFS2851100
09506A01010861 5.03 0000000001HUFS3851100
09506A01010961 5.03 0000000001HILB6851100
09506A01011061 5.03 0000000001HULB4851100
09506A01011161 5.03 0000000001HRLE1852100
09506A01011261 5.03 0000000001HALI1852100
09506A02000021 5.03 00000000089200190 21G1LV14W0KY[redacted]199096350145102020 26
000000001791955 99 99 999999021
09506A02000022 5.03 00000000000000000000000000000[redacted]20000000016000
09506A02000031 5.03 00000000001019999999 9
0910340001
09506A02000041 5.03 00000000000110000000000000008000000000000000000000000000
09506A02000042 5.03 000000000
1 000043080
09506A02010051 5.03 00000000029174220111000000000000000430210000000000000000
000000000000021111100100
09506A02020051 5.03 00000000030173190213000000000000000130210000000000009000
002000000000221111101101
09506A02020161 5.03 0000000007KLCI1121100
09506A02020261 5.03 0000000007KRCI1121100
09506A999999990000000000000000000000000000000000000000000000000000000000000000000000000000000000000000000000000
00000000000002

OCCUPANT ASSESSMENT Vehicle: 1 Occupant: 1

11
INTRA ERRORS

0HH1271 2
HH1272
HH1273
HH1274
HH1275

******* THIS CASE SHOWS EJECTION WITH RESTRAINT USEAGE. ******
****** CHECK YOUR DATA AND IF CORRECT, NOTIFY YOUR ZONE ******
EJECTION OA12 is equal to 1-3 and (MANUAL BELT USE OA18 does not
equal 00 or AIR BAG DEPLOYMENT OA22 does not equal 0
or AUTOMATIC BELT USE OA45 does not equal 0).

HH1281 2 ******** THIS VEHICLE IS INICATED AS HAVING AN AIRBAG. *****
HH1282 ****** CHECK YOUR DATA AND IF CORRECT, NOTIFY YOUR ZONE *******
HH1283 AIR BAG AVAILABILITY/FUNCTION OA21 equals 1-3.

HH1991 2 ****** THIS CASE SHOWS AN AIR BAG DIDN'T DEPLOY. ******
HH1992 ****** CHECK YOUR DATA AND IF CORRECT, NOTIFY YOUR ZONE ******
HH1993 ****** AND NHTSA HEADQUARTERS AT [redacted]. ******
HH1994 AIR BAG DEPLOYMENT OA22 equals 4.

0
OCCUPANT ASSESSMENT Vehicle: 2 Occupant: 2

11
INTRA ERRORS

0HH1091 2 If TREATMEN
T OA35 equals 0, 4 or 5, then WORKING DAYS LOST OA38 HH1092 should equa
1 00, 01, 97 or 99.

01
INTER ERRORS

0EH0011 2 If TREATMENT OA35 equals 1, then 1st DEFORMATION EXTEN
T EV11 EH0012 should be greater than 03. GV=01 OA=01

HT0041 2 If TREATMENT OA35 equals 0, then no SOURCE OF DATA OI05(n)
HT0042 should equal 1-6. GV=02 OA=02

PSU09 ERROR SUMMARY SCREEN [redacted]93
CASE 506A
CURRENT VERSION: 5.03

FORM NAME	NUMBER OF DOLLAR SIGNS	NUMBER OF LEVEL 1 ERRORS	NUMBER OF LEVEL 2 ERRORS	VERSION NUMBER CONSISTENT
Accident	0	0	0	Y
General Vehicle	0	0	0	Y
Vehicle Exterior	0	0	0	Y
Vehicle Interior	0	0	0	Y
Occupant Assesment	0	0	4	Y
Occupant Interior	0	0	0	Y
Total Inter Errors		0	2	
Total Case Errors	0	0	6	

U.S. Department of Transportation
National Highway Traffic Safety Administration

SLIDE INDEX

NATIONAL ACCIDENT SAMPLING SYSTEM
CRASHWORTHINESS DATA SYSTEM

Primary Sampling Unit Number 0 9 Case Number—Stratum 5 0 6 A

Slide No.	Vehicle No.	Direction of Picture	Description of Slide Subject Matter
1-16	1	SOUTH	FORWARD TRAJECTION
17-26	1	NORTH	LOOK BACK
27-29	2	SOUTH	FORWARD TRAJECTION
30-33	2	NORTH	LOOK BACK
34			REF - PT
35			PHYS. REF LINE
36-72	1		EXTERIOR AND INTERIOR
73-104	2		EXTERIOR AND INTERIOR
~~105~~	1		VIN PLATE (MISSING)
~~106~~	2		VIN PLATE (MISSING)

HS Form 434B (1/92)

Slide No.	Vehicle No.	Direction of Picture	Description of Slide Subject Matter

PSU 09-506A (1992) #1

PSU 09-506A (1992) #2

PSU 09-506A (1992) #3

PSU 09-506A (1992) #4

PSU 09-506A (1992) #5

PSU 09-506A (1992) #6

PSU 09-506A (1992) #7

PSU 09-506A (1992) #8

PSU 09-506A (1992) #9

PSU 09-506A (1992) #10

PSU 09-506A (1992) #11

PSU 09-506A (1992) #12

PSU 09-506A (1992) #13

PSU 09-506A (1992) #14

PSU 09-506A (1992) #15

PSU 09-506A (1992) #16

PSU 09-506A (1992) #17

PSU 09-506A (1992) #18

PSU 09-506A (1992) #19

PSU 09-506A (1992) #20

PSU 09-506A (1992) #21

PSU 09-506A (1992) #22

PSU 09-506A (1992) #23

PSU 09-506A (1992) #24

PSU 09-506A (1992) #25

PSU 09-506A (1992) #26

PSU 09-506A (1992) #27

PSU 09-506A (1992) #28

PSU 09-506A (1992) #29

PSU 09-506A (1992) #30

PSU 09-506A (1992) #31

PSU 09-506A (1992) #32

PSU 09-506A (1992) #33

PSU 09-506A (1992) #34

PSU 09-506A (1992) #35

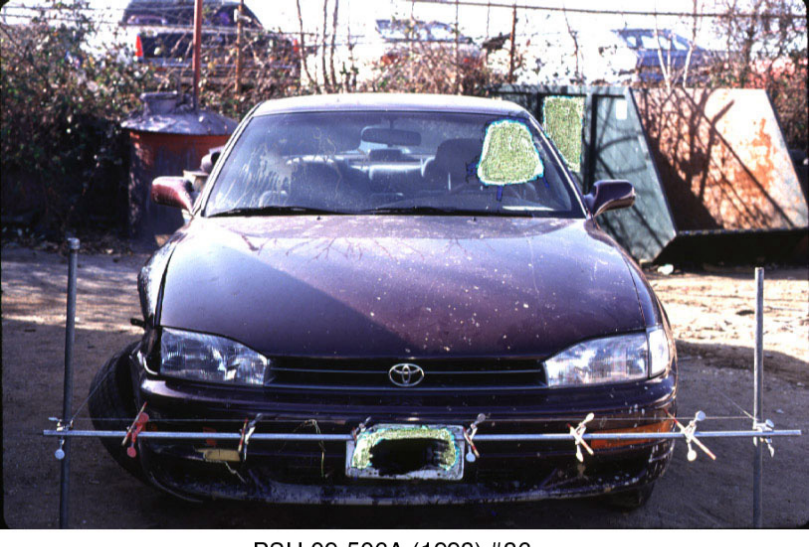

PSU 09-506A (1992) #36

PSU 09-506A (1992) #37

PSU 09-506A (1992) #38

PSU 09-506A (1992) #39

PSU 09-506A (1992) #40

PSU 09-506A (1992) #41

PSU 09-506A (1992) #42

PSU 09-506A (1992) #43

PSU 09-506A (1992) #44

PSU 09-506A (1992) #45

PSU 09-506A (1992) #46

PSU 09-506A (1992) #47

PSU 09-506A (1992) #48

PSU 09-506A (1992) #49

PSU 09-506A (1992) #50

PSU 09-506A (1992) #51

PSU 09-506A (1992) #52

PSU 09-506A (1992) #53

PSU 09-506A (1992) #54

PSU 09-506A (1992) #55

PSU 09-506A (1992) #56

PSU 09-506A (1992) #57

PSU 09-506A (1992) #58

PSU 09-506A (1992) #59

PSU 09-506A (1992) #60

PSU 09-506A (1992) #61

PSU 09-506A (1992) #62

PSU 09-506A (1992) #63

PSU 09-506A (1992) #64

PSU 09-506A (1992) #65

PSU 09-506A (1992) #66

PSU 09-506A (1992) #67

PSU 09-506A (1992) #68

PSU 09-506A (1992) #69

PSU 09-506A (1992) #70

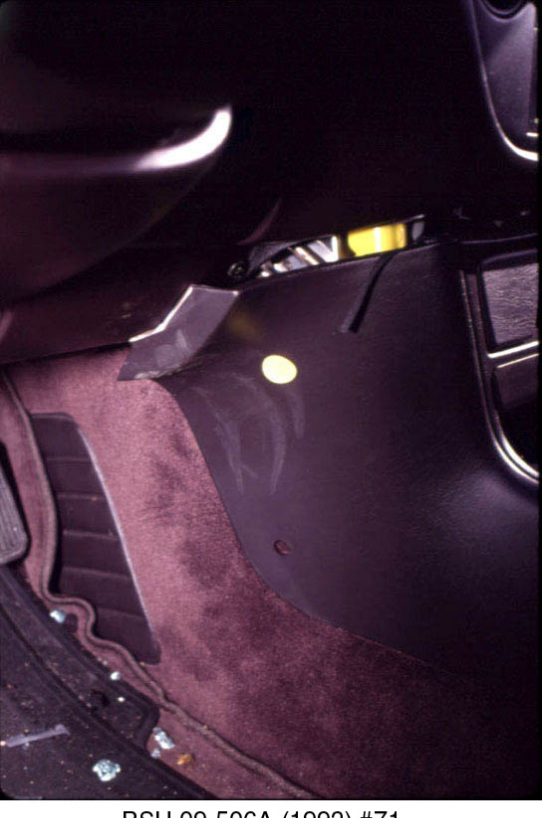

PSU 09-506A (1992) #71

PSU 09-506A (1992) #72

PSU 09-506A (1992) #73

PSU 09-506A (1992) #74

PSU 09-506A (1992) #75

PSU 09-506A (1992) #76

PSU 09-506A (1992) #77

PSU 09-506A (1992) #78

PSU 09-506A (1992) #79

PSU 09-506A (1992) #80

PSU 09-506A (1992) #81

PSU 09-506A (1992) #82

PSU 09-506A (1992) #83

PSU 09-506A (1992) #84

PSU 09-506A (1992) #85

PSU 09-506A (1992) #86

PSU 09-506A (1992) #87

PSU 09-506A (1992) #88

PSU 09-506A (1992) #89

PSU 09-506A (1992) #90

PSU 09-506A (1992) #91

PSU 09-506A (1992) #92

PSU 09-506A (1992) #93

PSU 09-506A (1992) #94

PSU 09-506A (1992) #95

PSU 09-506A (1992) #96

PSU 09-506A (1992) #97

PSU 09-506A (1992) #98

PSU 09-506A (1992) #99

PSU 09-506A (1992) #100

PSU 09-506A (1992) #101

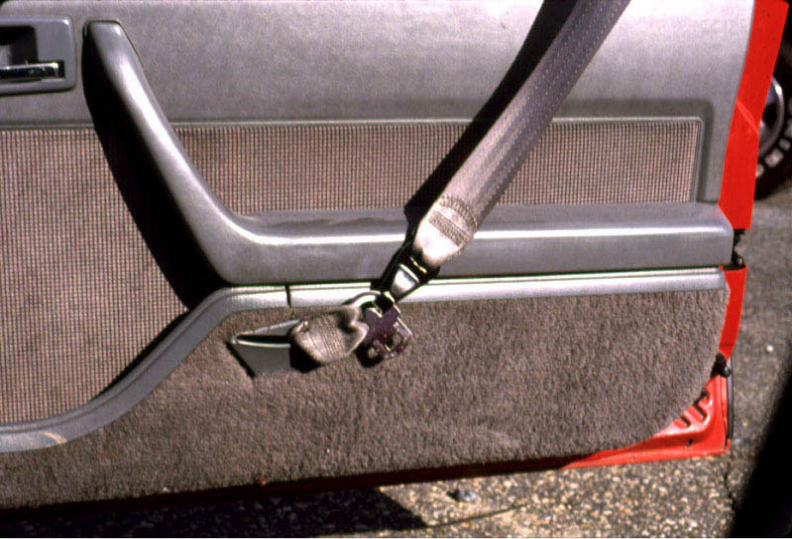

PSU 09-506A (1992) #102

PSU 09-506A (1992) #103

PSU 09-506A (1992) #104