# RUS Bulletin 1728F-806
# Viewing Instructions

There are both bookmarks and links imbedded in this file.

## Browsing with bookmarks

Bookmarks mark parts of a document for quick access.

**To jump to a topic by using its bookmark:**

1. The bookmarks are shown on the left side of the screen. If a triangle appears to the left of the bookmark, click the triangle to show or hide subordinate bookmarks.

2. To go to the destination specified by a bookmark, click the bookmark text or double-click the page icon to the left of the bookmark name.

## Following links

The index in this publication uses links to allow the user to quickly go to the desired section.

**To follow a link:**

1. Move the pointer over a linked area. The pointer changes to a pointing finger when positioned over a link.

2. Click to follow the link.

## General information:

You can use the buttons at the top of the screen for going from page to page. Also, by right-clicking your mouse, you will see a navigation box. For details, please see the Acrobat Reader help screens.

USDA

**United States Department of Agriculture**

Rural Utilities Service

RUS Bulletin 1728F-806 (D-806)

**June 2000**

# Specifications and Drawings for Underground Electric Distribution

UNITED STATES DEPARTMENT OF AGRICULTURE
Rural Utilities Service

**BULLETIN 1728F-806**

**SUBJECT:** **Specifications and Drawings for Underground Electric Distribution**

Incorporated by reference (IBR) in 7 CFR Part 1728

**TO:** RUS Electric Staff
RUS Electric Borrowers

**DATES:**
**Effective Date:** June 26, 2000*.
**Incorporation by Reference:** IBR approved by the Director, Office of the Federal Register June 26, 2000.
**Expiration Date:** Date of change in 7 CFR Part 1728 by rulemaking.

**OFFICE OF PRIMARY INTEREST:** Electric Staff Division

**FILING INSTRUCTIONS:** This bulletin replaces Bulletin 50-6 (D-806), Specifications and Drawings for Underground Electric Distribution, dated February 27, 1990. Discard Bulletin 50-6 and replace it with this bulletin, RUS Bulletin 1728F-806.

**AVAILABILITY:** This bulletin is available on the RUS electric web page at: http://www.usda.gov/rus.

**PURPOSE:** This bulletin contains complete specifications setting forth the RUS requirements for constructing rural underground electric distribution systems using state-of-the-art materials, equipment, and construction methods. This information is incorporated by reference in 7 CFR Part 1728.

Assistant Administrator
Electric Program

June 9 2000
Date

# TABLE OF CONTENTS



**INDEX:**

## 1. GENERAL

**1.1** These specifications provide for the construction of underground distribution power facilities as specified by the owner. The owner is the organization contracting for the services and, when used in connection with RUS financed facilities, is synonymous with the term borrower as defined in §1710.2.

**1.2** It is the responsibility of the borrower to ensure that all construction work shall be accomplished in a thorough and workmanlike manner in accordance with the staking sheets, plans and specifications, and the construction drawings.

**1.3** If construction work is performed by the Owner's force account crews instead of a contractor, any reference to "Contractor" apply to the force account crews.

**1.4** The provisions of section §1724.50, Compliance with National Electrical Safety Code (NESC) apply to all borrower electric system facilities regardless of the source of financing.

a. A borrower must ensure that its electric system, including all electric distribution, transmission, and generating facilities, is designed, constructed, operated, and maintained in accordance with all applicable provisions of the most current and accepted criteria of the NESC and all applicable and current electrical and safety requirements of any State or local government entity. Copies of the NESC may be obtained from the Institute of Electrical and Electronic Engineers, Inc., 345 East 47th Street, New York, New York 10017-2394. This requirement applies to the borrower's electric system regardless of the source of financing.

b. Any electrical standard requirements established by RUS are in addition to, and not in substitution for or a modification of, the most current and accepted criteria of the NESC and any applicable electrical or safety requirements of any State or local governmental entity.

c. Overhead distribution circuits shall be constructed with not less than the Grade C strength requirements as described in Section 26, Strength Requirements, of the NESC when subjected to the loads specified in NESC Section 25, Loadings for Grades B and C. Overhead transmission circuits shall be constructed with not less than the Grade B strength requirements as described in NESC Section 26.

**2. STORAGE OF MATERIAL AND EQUIPMENT:** It is the responsibility of the borrower to ensure that all material and equipment to be used in construction must be stored so as to be protected from deteriorating effects of the elements. If outdoor storage cannot be avoided, the material and equipment must be stacked on supports well above the ground line and protected from the elements as appropriate, and with due regard to public safety.

**3. HANDLING OF CABLE:** It is the responsibility of the borrower to ensure that the cable shall be handled carefully at all times to avoid damage, and shall not be dragged across the ground, fences or sharp projections. Care shall be exercised to avoid excessive bending of the cable. The borrower shall ensure that the ends of the cable be sealed at all times against moisture with suitable end caps. Where it is necessary to cut the cable, the ends will be terminated or sealed immediately after the cutting operation.

## 4. PLOWING

**4.1** When cables are to be installed by plowing, it is the responsibility of the borrower to ensure that the plowing equipment be subject to the approval of the Owner and the public authorities having jurisdiction over highway and road rights-of-way. The plow must be provided with a means to assure positive holddown of the plow blade to provide proper depth at all times.

**4.2** The design of the plowshare must ensure that the cable passing through the plow will not be bent in a radius less than 12 times the outside diameter of the cable. The equipment must be capable of extending the plow a minimum of 6 inches below the specified depth under all terrain conditions of plow utilization.

**4.3** The borrower must ensure that equipment and construction methods used during construction cause minimum displacement of the soil. The slot made in the soil by the cable plows must be closed immediately by driving a vehicle track or wheel over the slot or by other suitable means.

**4.4** Starting and terminating points of the plowing operation must be excavated prior to cable installation to reduce possible cable damage and to assure sufficient burial depth.

**4.5** During the plowing operation, care is to be exercised to feed the cable or wire into the ground through the plow loosely and at minimum tension. Besides using proper equipment and construction methods, supervision by the borrower or the borrower's representative shall be furnished at all times at the site of plowing operations to assure compliance with these specifications.

**4.6** If, during the plowing operation, the plow should strike a buried object or rock that would stop the equipment and necessitate removal of the plow from the ground, the plow must be removed from the ground carefully and, if practical, without backing the plow. If it should be necessary to back the plow to remove it from the ground, the cable must be uncovered a sufficient distance back for inspection by the Owner to determine whether the cable or wire has been damaged.

**4.7** The cable must be inspected carefully as it is payed out from the reel to be certain that it is free from visible defects. Every instance of damaged cable observed at any time, whether prior to installation, during installation, or when discovered by test or observation subsequent to installation in plant, shall be immediately called to the attention of the Owner. Repair or correction of such damage must be completed promptly and in accordance with the written instruction of the Owner. The location of any such repair must be indicated on the staking sheet.

## 5. SPECIAL REQUIREMENTS FOR COORDINATION BETWEEN OWNER AND CONTRACTOR WHERE CABLE IS TO BE INSTALLED BY PLOWING

**5.1** It is the responsibility of the borrower to ensure that the Contractor and the Owner shall jointly review the staking sheets prior to the start of construction. At that time, the Contractor shall propose any desirable changes or clarifications. These changes, if approved by the Owner, shall be made and recorded on the staking sheets. No changes on the staking sheets shall be made by the Contractor without the prior written approval of the Owner. A representative of the Owner shall remain in the immediate vicinity of the plowing operations at all times and shall consider and possibly approve any acceptable changes proposed by the Contractor. A representative of the Owner shall also inspect any damage to cable and approve acceptable methods of repair or correction of such damage in accordance with the provisions of these specifications.

**5.2** In the event that rock is encountered during the plowing operation so that the buried cable cannot be installed to the required minimum depths in soil, the Contractor shall determine for the Owner the nature and extent of the rock encountered. Based on this information, the Owner shall determine whether the cable is to be rerouted, trenched in rock or a change made to aerial construction. This decision shall be made promptly, and appropriate changes in units shall be made on the staking sheets. Such changes shall be in writing, dated, and initialed by the Owner.

**5.3** Due to the necessity of making on-the-spot corrections and changes on staking sheets, it may not be possible for the Owner to issue revised staking sheets to the Contractor in all cases. When changes are made, dated, and initialed by the Owner on a set of the Contractor's staking sheets, it shall be the Contractor's responsibility to transfer these changes to all other sets of staking sheets being used by the Contractor for construction purposes.

**5.4** The Contractor shall provide a competent representative to work with the Owner on the inventory and inspection of buried cable units. The inventory of buried cable will be made as soon after the plowing operation as practical to avoid later disagreements on the quantity of cable installed when changes are required in the project.

## 6. TRENCHING

**6.1** It is the responsibility of the borrower to ensure that all trenching depths specified are minimum as measured from the final grade to the top surface of the cable. The routing must be as shown on the staking sheets and plans and specifications unless conditions encountered are such that changes are necessary to accomplish the work. In such event, the Owner shall be notified promptly. If rock or other difficult digging is involved, the Contractor shall determine the nature and extent of the difficulty, and the Owner shall determine whether rerouting, rock trenching, plowing or other changes are necessary. Loose soil or crumbly rock shall not be considered as "difficult digging." The trench widths specified are minimum and should be increased as necessary to obtain the required depths in loose soils.

**6.2** Where trenches are intended for more than one cable, particular care must be taken to provide for extra depth and width to allow for soil falling into the trench during the laying of the first cables.

**6.3** Care shall be exercised to minimize the likelihood of waterflow since this may cause trench damage and reduction in trench depth. If this occurs, the trench must be cleared to the specified depth before installing the cable.

**6.4** All trenches must follow straight lines between staked points to the greatest extent possible. Secondary and service trenches must extend in a straight line from takeoff points wherever possible. The trenches must be dug so that the bottom has a smooth grade. Large rocks, stones and gravel in excess of l inch must be removed from the bottom of the trench. Where this cannot be accomplished, a 2 inch bed of sand or clean soil must be placed in the bottom of the trench.

**6.5** Construction shall be arranged so that trenches may be left open for the shortest practical time to avoid creating a hazard to the public and to minimize the likelihood of collapse of the trench due to other construction activity, rain, accumulation of water in the trench, etc.

## 7. INSTALLING CABLE IN TRENCH

**7.1** It is the responsibility of the borrower to ensure that the cable must be placed in the trench as soon after the trenching operation as feasible. Wherever possible, cable must be payed out from the reel mounted on a moving vehicle or trailer. The reel must be supported so that it can turn easily without undue strain on the cable. The cable must be carefully placed in the trench by hand. All cable placement will be done under constant supervision by the borrower or the borrower's representative who assure that no damage to the cable occurs.

**7.2** The cable must be inspected carefully as it is removed from the reel in laying operations to be certain that it is free from visible defects. The Owner shall decide upon corrective action when defects are discovered.

**7.3** Where more than one cable is to be placed in a trench, the spacings required by the specifications must be observed. Care must be taken that any soil falling into the trench during the laying of the first cable does not reduce the clearances of the last cable below that specified. Should this occur, the excess soil must be removed carefully by hand or with equipment that will not damage the installed cables.

**7.4** Sufficient slack, and in no case less than 24 inches, must be left at all risers, transformer pads, pedestals and terminal points so that movements of cable after backfilling will not cause damaging strain on the cable or terminals. The cable trench must be mechanically compacted at least 36 inches from all riser poles, pads, pedestals and terminal points.

**7.5** The ends of all secondary cable terminated below ground must be long enough to reach at least 12 inches above the top of the underground enclosure.

**8. MINIMUM BENDING RADIUS OF CABLE:** It is the responsibility of the borrower to ensure that the minimum bending radius of primary cable is 12 times the overall diameter of the cable. The minimum bending radius of secondary and service cable is six times the overall diameter of the cable. In all cases the minimum radius specified is measured to the surface of the cable on the inside of the bend. Cable bends must not be made within 6 inches of a cable terminal base.

**9. CONDUIT:** It is the responsibility of the borrower to ensure that all exposed ends of conduit must be plugged during construction to prevent the entrance of foreign matter and moisture into the conduit. Burrs or sharp projections which might injure the cable must be removed. Riser shield or conduit must extend at least 18 inches below grade at all riser poles. If full round conduit is used as a riser shield, an end bell must be installed on the lower end to prevent damage to the cable.

**10. TAGGING OF CABLES AT TERMINATION POINTS:** As the cables are laid, it is the responsibility of the borrower to ensure that they must be identified and tagged. The identification must be of a permanent type, such as that done on plastic or corrosion resistant metal tags. The tag must be securely attached to the cable. Paper or cloth tags are not acceptable.

**11. SPLICES**

**11.1** It is the responsibility of the borrower to ensure that cable splices must be of the pre-molded rubber, heat-shrink, or cold-shrink type, of the correct voltage rating and must be installed in accordance with the splice manufacturer's instructions. Splices that depend solely on tape for a moisture barrier must not be used.

**11.2** Not more than one splice may be permitted for each 2000 feet of cable installed unless authorized by the Owner. No bends may be permitted within 12 inches of the ends of a splice. The cable or circuit numbers and the exact location of all splices must be noted on the staking sheets (as built).

**12. PRIMARY CABLE TERMINATION AND STRESS CONES:** It is the responsibility of the borrower to ensure that prefabricated stress cones or terminations must be installed in accordance with the manufacturer's instructions at all primary cable terminals. They must be suitable for the size and type of cable that they are used with and for the environment in which they will operate. Any indication of misfit, such as a loose or exceptionally tight fit, must be called to the Owner's attention. The outer conductive surface of the termination must be bonded to the system neutral. A heat-shrink or cold-shrink sleeve must be installed to seal between the body of the termination and the cable jacket.

**13. SPECIAL PRECAUTIONS FOR CABLE SPLICES AND TERMINATIONS:** It is the responsibility of the borrower to ensure that a portable covering or shelter must be available for use when splices or terminations are being prepared and when prefabricated terminations are being switched. The shelter must be used as necessary to keep rain, snow and windblown dust off the insulating surfaces of these devices. Since cleanliness is essential in the preparation and installation of primary cable fittings, care shall be exercised to prevent the transfer of conducting particles from the hands to insulating surfaces. Mating surfaces must be wiped with a solvent such as denatured alcohol to remove any possible accumulation of dirt, moisture or other conducting materials. A silicone grease or similar lubricant should be applied afterwards in accordance with the manufacturer's recommendations. Whenever prefabricated cable devices are opened, the unenergized mating surfaces must be lubricated with silicone grease before the fittings are reconnected.

**14. SECONDARY AND SERVICE CONNECTIONS**

**14.1** It is the responsibility of the borrower to ensure that a suitable inhibiting compound must be used with all secondary and service connections.

**14.2** All secondary cable connections located below grade or in secondary pedestals must be made with pre-insulated secondary connector blocks. Diving bells with open terminals, insulating boots or moisture barriers that depend solely on tape are not acceptable.

**14.3** All transformer secondary phase terminal connections must be completely insulated. If the secondary phase terminals are threaded studs, the connection must be made with a pre-insulated secondary transformer connection block. If the transformer secondary phase terminals are insulated cable leads, connection must be made with a pre-insulated secondary connector block or with a secondary prefabricated splice when the transformer leads continue directly to the service.

**14.4** If a transformer is so large that it must have secondary spades, the spades must be taped or otherwise insulated. Boots used for insulation must be taped so that they cannot be readily slipped off.

**14.5** Secondary connections to terminals of pole-mounted transformers must be made so that moisture cannot get inside the cable insulation. This may be accomplished by covering the terminals and bare conductor ends with an appropriate moisture sealant or providing a drip loop.

**14.6** The secondary connections and insulation must have accommodations for all future and existing services as shown on the plans and specifications.

**15. PEDESTALS:** Where required, it is the responsibility of the borrower to ensure that pedestal stakes must be driven vertically into the bottom of the trench before cables are placed, and shall be located as shown on the staking sheets. Pedestal posts and supporting stakes must be in place before the cable is installed. All pedestals should be approximately at the same height above finished grade.

**16. INSPECTION AND INVENTORY OF BURIED UNITS:** Before any backfilling operations are begun, it is the responsibility of the borrower to ensure that the Contractor and Owner shall jointly inspect all trenches, cable placement, risers, pedestal stakes, and other construction that will not be accessible after backfilling, and an inventory of units shall be taken. If corrections are required, a second inspection shall be made after completion of the changes.

**17. BACKFILLING**

**17.1** It is the responsibility of the borrower to ensure that the first 6 inches of trench backfill shall be free from rock, gravel or other material which might damage the cable jacket. In lieu of cleaning the trench, the Contractor may, at the Contractor's option, place a 2 inch bed of clean sand or soil under the cable and 4 inches of clean soil above the cable. Cleaned soil backfill when used shall contain no solid material larger than l inch. This soil layer must be carefully compacted so that the cable will not be damaged.

**17.2** Backfilling must be completed in such a manner that voids will be minimized. Excess soil must be piled on top and must be well tamped. All rock and debris must be removed from the site, and any damage to the premises repaired immediately.

**17.3** Pieces of scrap cable or other material remaining after installation must not be buried in the trench as a means of disposal.

**18. EQUIPMENT PADS:** It is the responsibility of the borrower to ensure that the site for the pad shall be on undisturbed earth adjacent to but not over the trench. The site shall be cleared of all debris and excavated to the specified depth. Gravel or sand may be added to the site and thoroughly compacted. The pad shall be installed level at the specified elevation.

**19. TRANSFORMERS:** It is the responsibility of the borrower to ensure that transformers shall be handled carefully to avoid damage to the finish and shall be positioned in accordance with the staking sheets and the plans and specifications. Only qualified and experienced personnel shall be allowed to make connections and cable terminations.

**20. EQUIPMENT ENCLOSURES:** It is the responsibility of the borrower to ensure that excavations for sleeve-type transformer pads and other below-grade enclosures shall be made so as to disturb the surrounding earth as little as practical. Enclosures shall be installed with side walls plumb. When enclosures are of fiber, plastic, or other semiflexible material, backfilling should be done with covers in place and with careful tamping so as to avoid distortion of the enclosure. When installation is complete, the cover of the enclosure shall not be lower than and not more than 2 inches higher than the grade specified by the Owner. Soil in the immediate vicinity shall be tamped and sloped away from the enclosure. At the Owner's option, the excess soil shall be removed from the site or spread evenly over the surface of the ground to the satisfaction of the Owner.

**21. UTILITY SAFETY SIGNS:** It is the responsibility of the borrower to ensure that utility safety signs must be in accordance with ANSI Z535.2, Environmental and Facility Safety Signs, and shall be applied in accordance with RUS drawings. Copies of the ANSI Z535.2 may be obtained from the National Electrical Manufacturers Association (NEMA), 1300 North 17th Street, Suite 1847, Rosslyn, Virginia 22209.

**22. SACRIFICIAL ANODES:** It is the responsibility of the borrower to ensure that sacrificial anodes specified shall be installed with backfill package intact and connecting leads positioned for proper connection after the equipment is in place. Anodes shall neither be moved, positioned, lifted, nor lowered into place by pulling on the connecting leads.

**23. GROUNDING**

**23.1** It is the responsibility of the borrower to ensure that all neutral conductors, grounding electrodes, sacrificial anodes and groundable parts of equipment shall be interconnected. All interconnections shall be made as shown on the construction drawings. A copper-clad or galvanized steel ground rod with minimum length of 8 feet shall be installed at all equipment locations as shown in the construction drawings and at all cable splices and taps.

**23.2** All pad-mounted equipment enclosures, including transformers, shall be grounded in such a manner that two separate grounding paths exist between the enclosure and the grounding rod(s).

**24. CABLE LOCATION MARKERS:** It is the responsibility of the borrower to ensure that location of permanent cable markers shall be as shown on the staking sheets.

**25. INSTALLED CABLE AND ACCEPTANCE TESTS**

**25.1** It is the responsibility of the borrower to ensure that:

a. Continuity: After installation of the cable and prior to the high potential test specified below, authorized personnel shall perform a simple continuity test on the system. This can easily be accomplished by grounding the conductor at the source and checking for continuity from the end of each tap with an ohmmeter or with a battery and ammeter.

b. High Potential: After successful continuity tests, authorized personnel should perform high potential tests on each length of cable, with terminations in place but disconnected from the system.

**25.2** The installation shall withstand for a minimum of 15 minutes a DC test potential as follows:

Primary URD Cable
(XLP-TR, and EPR)

| Rated Voltage | Insulation Thickness Inches | Field DC Acceptance Test Voltage |
|---|---|---|
| 15 kV | .220 | 64.0 kV |
| 25 kV | .260 | 80.0 kV |
| 25 kV | .345 | 100.0 kV |

The voltage may either be increased continuously or in steps to the maximum test value:

a. If increased continuously, the rate of increase of test voltage should be approximately uniform and increasing to maximum voltage in not less than 10 seconds and in not more than approximately 60 seconds.

b. If applied in steps, the rate of increase of test voltage from one step to the next should be approximately uniform. The duration at each step shall be long enough for the absorption current to attain reasonable stabilization (l minute minimum). Current and voltage readings should be taken at the end of each step duration. The number of steps should be from five to eight.

**25.3** **Warning:** A hazardous voltage may still exist on the cable after the above testing has been completed. Therefore, before handling the cable, it is the responsibility of the borrower to ensure that the conductor shall be grounded to permit any charge to drain to earth.

## Attachment A

## INDEX OF DRAWINGS

### Primary Terminal Pole Assemblies:

| | |
|---|---|
| UA1 | Single Phase Cable Deadend Terminal Pole |
| UA2 | Single Phase Cable Deadend Terminal Pole |
| UA3 | Single Phase Cable Tangent Terminal Pole |
| UB1 | Vee-Phase Cable Terminal Pole with Cutouts and Crossarm Mounting Arresters |
| UB2 | Vee-Phase Cable Terminal Pole with Cutouts and Bracket Mounting Arresters |
| UB3 | Vee-Phase Cable Terminal Pole without Cutout, with Crossarm Mounting Arresters |
| UB4 | Vee-Phase Cable Terminal Pole without Cutout, with Bracket Mounting Arresters |
| UC1 | Three Phase Cable Terminal Pole with Cutouts and Crossarm Mounting Arresters |
| UC2 | Three Phase Cable Terminal Pole with Cutouts and Bracket Mounting Arresters |
| UC2-1 | Three Phase Cable Deadend Terminal Pole |
| UC2-2 | Three Phase Cable Tangent Terminal Pole |
| UC5-1 | Three Phase Cable Deadend Terminal Pole with Disconnect Switches |
| UC6-1 | Three Phase Cable Tangent Terminal Pole with Disconnect Switches |

**Transformer Assemblies:**

| | |
|---|---|
| UG6,<br>UG6B, | Single Phase Pad-Mounted Transformer (Radial Feed) |
| UG7,<br>UG7B | Single Phase Pad Mounted Transformer (Loop Feed) |
| UG17,<br>UG17B | Three Phase Pad Mounted Transformer (Radial Feed) |
| UG17-2,<br>UG17-2B | Three Phase Pad Mounted Transformer (Loop Feed) |
| UG17-3,<br>UG17-3B | Three Phase Pad Mounted Loop Feed Transformer with Radial Feed |

**Secondary Assemblies:**

| | |
|---|---|
| UJ1,<br>UJ2 | Secondary Connector Blocks |
| UK5 | Secondary Pedestal Underground Cable |
| UK6 | Secondary Handhole Underground Cable |

**Pad Assemblies:**

| | |
|---|---|
| UM1-5C,<br>UM1-5NC | Pad Assemblies |
| UM1-6C | Three Phase Transformer Concrete Pads |
| UM1-7C,<br>UM1-7NC | Ground Sleeve Assembly |

**Sectionalizing Assemblies:**

| | |
|---|---|
| UM3-14 | Single Phase Sectionalizing Enclosure |
| UM3-44,<br>UM3-45 | Single Phase Pad Mounted Sectionalizer or Recloser |
| UM3-46 | Three, Single Phase Pad Mounted Reclosers |

| | |
|---|---|
| UM3E | Fuse/Switch Enclosure Installation |
| UM3E-1, UM3E-2 | Single Pole Switching 200 AMP Fuse Enclosure Installation Wiring Diagrams (Single Phase and Two Phase) |
| UM3E-3 | Fuse Enclosure (200 - 600 AMP) Wiring Diagrams (Three Phase) |

**Secondary Terminal Pole Assemblies:**

| | |
|---|---|
| UM5 | Secondary Cable Terminal Pole |
| UM5-6, UM5-6A | Secondary Cable Terminal to Meter Base |

**Miscellaneous Accessories:**

| | |
|---|---|
| UM6-1 – UM6-8 | Miscellaneous Accessories |

**Regulator Assembly:**

| | |
|---|---|
| UM7-1 | Single Phase Regulator Assembly with By-Pass Switching Function Underground to Underground |

**Metering Assemblies:**

| | |
|---|---|
| UM8 | Meter Installation Underground Source |
| UM8-2 | Meter Pedestal Wood Post |
| UM8-3 UM8-3A | Trough Type Meter Pedestal |
| UM8-4, UM8-4A | Meter & Switch Installation Underground Source |
| UM8-5 | Pad Mounted Switch Installation Underground Source |
| UM8-6 | C.T. Meter Installation Single Phase |
| UM8-7 | C.T. Meter Installation Three Phase |

**Miscellaneous Assemblies:**

| | |
|---|---|
| UM9-2 | Pad Mounted Switched Capacitor Enclosure |
| UM12 | Cable Route Marker |

**Corrosion Control Assemblies:**

| | |
|---|---|
| UM27-1 | Sacrificial Anode for Cable Splice Protection (Bare to Jacketed Cable) |
| UM27-2 | Sacrificial Anode for Equipment Ground Protection |
| UM27-3 | Sacrificial Anode for Cable Ground Protection |
| UM28 | Test Station |

**Sectionalizing Assembly:**

| | |
|---|---|
| UM33 | Multi Phase Sectionalizing Enclosure Pad or Sleeve Mounted |

**Grounding Assemblies:**

| | |
|---|---|
| UM48-1 | Grounding Assembly for Pad Mounted Single Phase Transformers and Enclosures |
| UM48-2 | Grounding Assembly for Pad Mounted Multi Phase Transformers and Enclosures |
| UM48-3 | Grounding Assembly for Underground Primary Cable |
| UM48-4 | Grounding Assembly for Underground Primary Cable (with Test Station) |
| UM48-5 | Grounding Grid for Pad Mounted Equipment Installation |
| UM48-6 | Grounding Array for Pad Mounted Equipment Installation |

**Conduit and Trenching Assemblies:**

| | |
|---|---|
| UR2 to UR2-2 | Trenches for Direct Burial Cables |

| | |
|---|---|
| UR2-3 to UR2-5 | Trenches for Direct Burial Cables |
| UR2-NT UR2-ST | Trenches for Direct Burial Cable |

**Guideline Drawings:**

| | |
|---|---|
| UX1 | Open Delta Connection with Single Phase Pad Mount Transformers |
| UX2 | Single Phase Pad Mounted Transformer Deferred Unit Pedestal Type |
| UX3 | Single Phase Padmounted Transformer Deferred Unit Pad-Sleeve Type |
| UX4 | Installation of Neutral Connection in Above Grade Pedestal |
| UX5 | Sectionalizing Pedestal Grounding |
| UX7 | Location Methods for Below Grade Enclosure |
| UX8 | Temporary Primary or Secondary Cable Termination for Future Use |
| UX11 | Connection of Terminator/Arrester to Overhead Line |

# Attachment B

# Construction Drawings

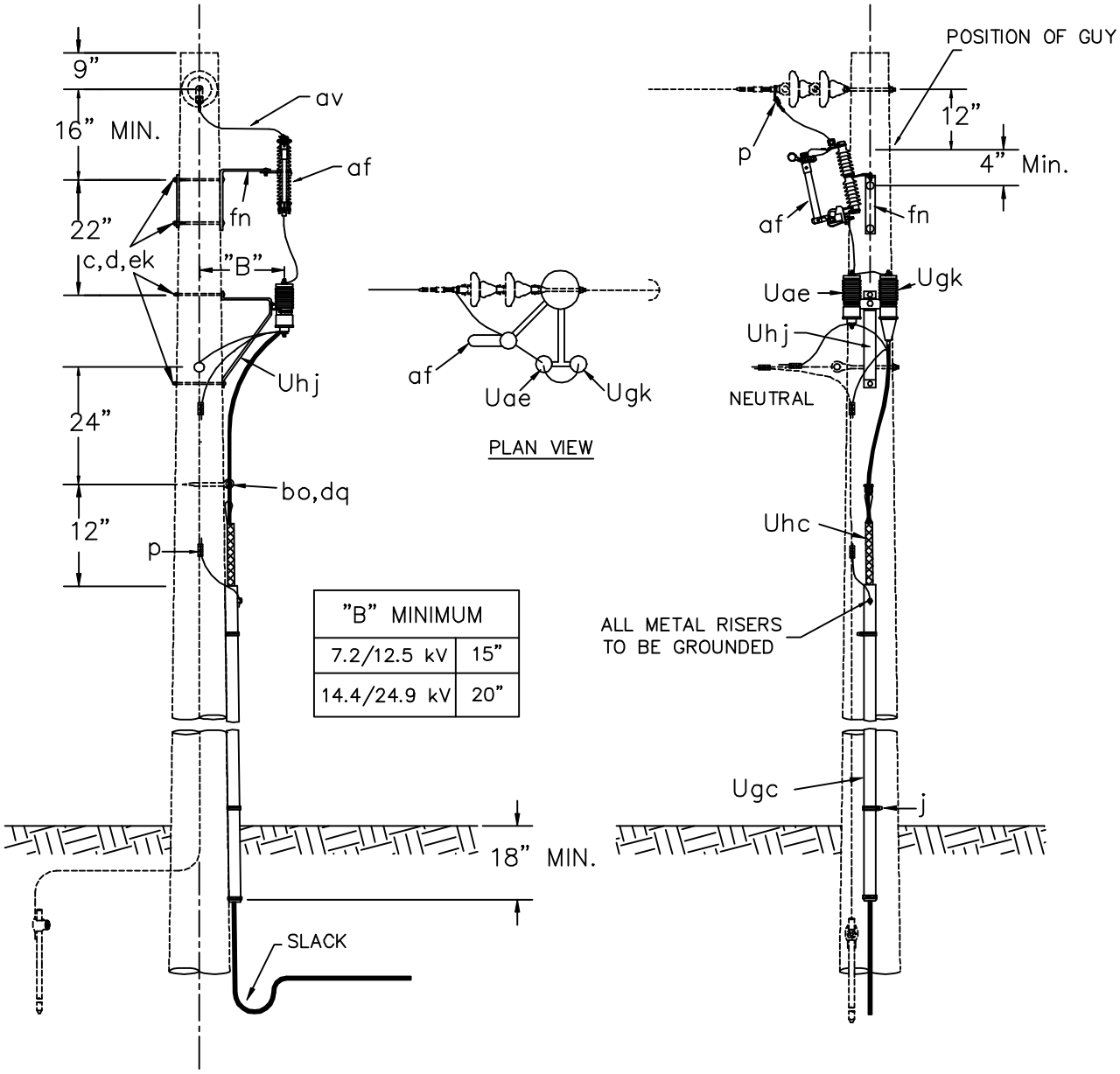


| "B" MINIMUM | |
|---|---|
| 7.2/12.5 kV | 15" |
| 14.4/24.9 kV | 20" |

| ITEM | QTY. | MATERIAL |
|---|---|---|
| c | 4 | Bolt, machine, 5/8" x required length. |
| d | 4 | Washer, square 2 1/4". |
| j | | Screws, lag 1/2" X 4" as required. |
| p | | Connectors, as required. |
| af | 1 | Fuse link. |
| af | 1 | Cutout |
| av | | Jumpers, as required. |
| bo | 1 | Anchor, shackle.Do not use if drive |
| | | hook is used. |
| dq | 1 | Eye screw, elliptical or drive hook. |
| ek | 4 | Locknuts |
| fn | 1 | Bracket, cutout extension. |
| | | |
| | | |
| Uae | 1* | Surge arrester |
| Ugc | 1 | Cable riser shield. Length as required. |
| Ugk | 1 | Cable termination. |
| Uhc | 1 | Cable support. |
| Uhj | 1 | Bracket combination. |

NOTES:

1. TOTAL ARRESTER LEAD LENGTH MUST BE UNDER 3'.
2. NO BENDS PERMITTED WITHIN 6" OF CABLE TERMINAL BASE.
3. ALLOW MINIMUM CABLE SLACK OF 24" AT BOTTOM OF RISER.

SINGLE PHASE CABLE DEADEND TERMINAL POLE

2000 UA1

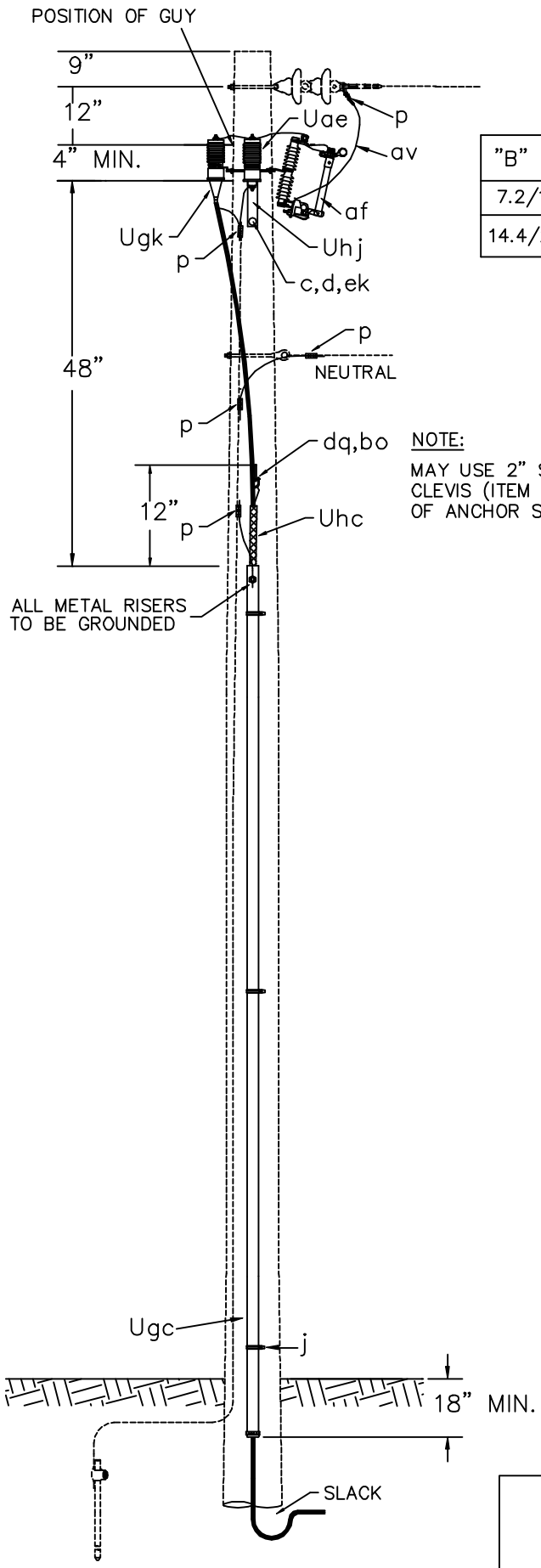


| "B" MINIMUM | |
|---|---|
| 7.2/12.5 kV | 15" |
| 14.4/24.9 kV | 20" |

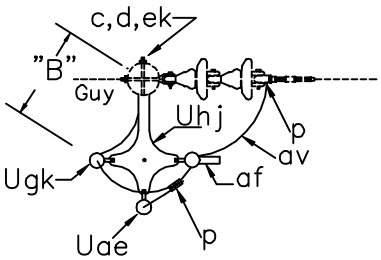


PLAN VIEW

NOTE:

MAY USE 2" SWINGING CLEVIS (ITEM s) INSTEAD OF ANCHOR SHACKLE.

NOTES:

1. TOTAL ARRESTER LEAD LENGTH MUST BE UNDER 3'.
2. NO BENDS PERMITTED WITHIN 6" OF CABLE TERMINAL BASE.
3. ALLOW MINIMUM CABLE SLACK OF 24" AT BOTTOM OF RISER.

| ITEM | QTY. | MATERIAL |
|---|---|---|
| c | 2 | Bolt, machine, 5/8" x required length. |
| d | 2 | Washer, square 2 1/4". |
| p | | Connectors, as required. |
| j | | Screw, lag, 1/2" x 4", as required. |
| | | |
| af | 1 | Fuse link. |
| af | 1 | Cutout |
| av | | Jumpers, as required. |
| bo | 1 | Anchor, shackle.Do not use if drive |
| | | hook is used. |
| dq | 1 | Eye screw, elliptical or drive hook. |
| ek | 2 | Locknuts, as required. |
| | | |
| Uae | 1* | Surge arrester |
| Ugc | | Cable Riser Shield, length as required |
| Ugk | 1 | Cable termination. |
| Uhc | 1 | Cable support. |
| Uhj | 1 | Equipment support bracket. |
| | | |

SINGLE PHASE CABLE DEADEND TERMINAL POLE

2000 UA2

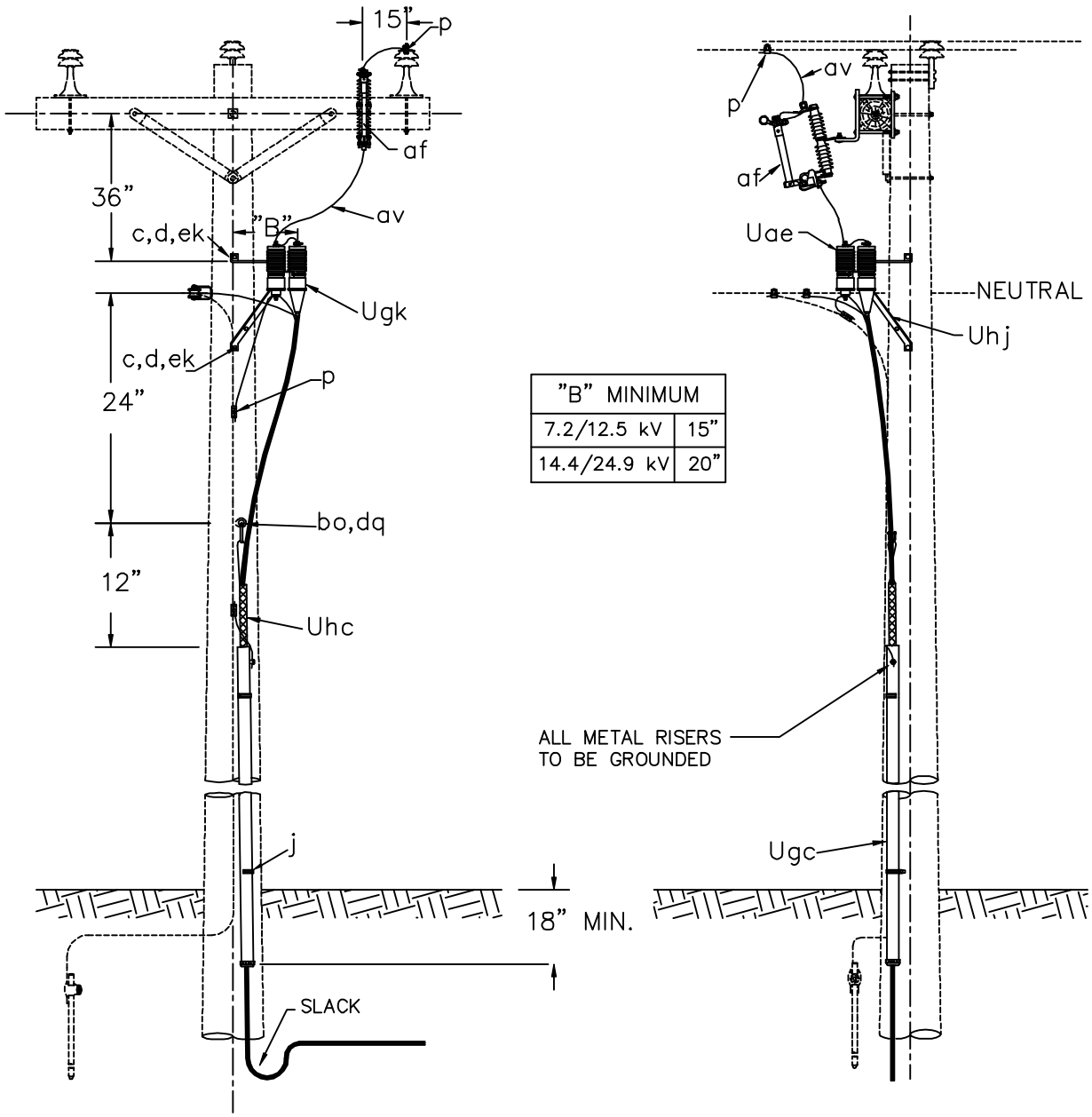


| "B" MINIMUM | |
|---|---|
| 7.2/12.5 kV | 15" |
| 14.4/24.9 kV | 20" |

| ITEM | QTY. | MATERIAL |
|---|---|---|
| c | 2 | Bolt, machine, 5/8" x required length. |
| d | 2 | Washer, square 2 1/4". |
| j | | Screw, lag 1/2" x 4" as required. |
| p | | Connectors, as required. |
| | | |
| af | 1 | Fuse link. |
| af | 1 | Cutout |
| av | | Jumpers, as required. |
| bo | 1 | Anchor, shackle.Do not use if drive |
| | | hook is used. |
| dq | 1 | Eye screw, elliptical or drive hook. |
| ek | 2 | Locknuts |
| | | |
| Uae | 1* | Surge arrester |
| Ugc | 1 | Cable riser shield. Length as required. |
| Ugk | 1 | Cable termination. |
| Uhc | 1 | Cable support. |
| Uhj | 1 | Bracket combination. |

NOTES:

1. TOTAL ARRESTER LEAD LENGTH MUST BE UNDER 3'.
2. NO BENDS PERMITTED WITHIN 6" OF CABLE TERMINAL BASE.
3. ALLOW MINIMUM CABLE SLACK OF 24" AT BOTTOM OF RISER.

SINGLE PHASE CABLE TANGENT TERMINAL POLE

2000 UA3

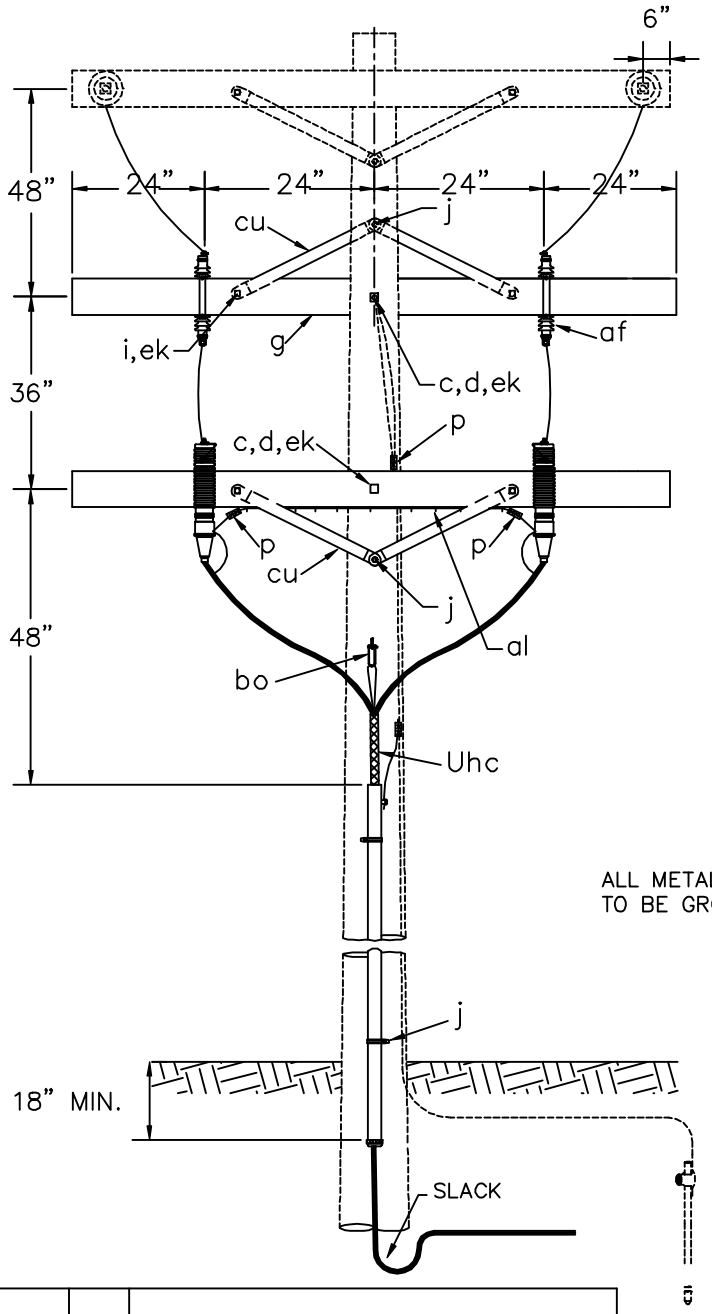


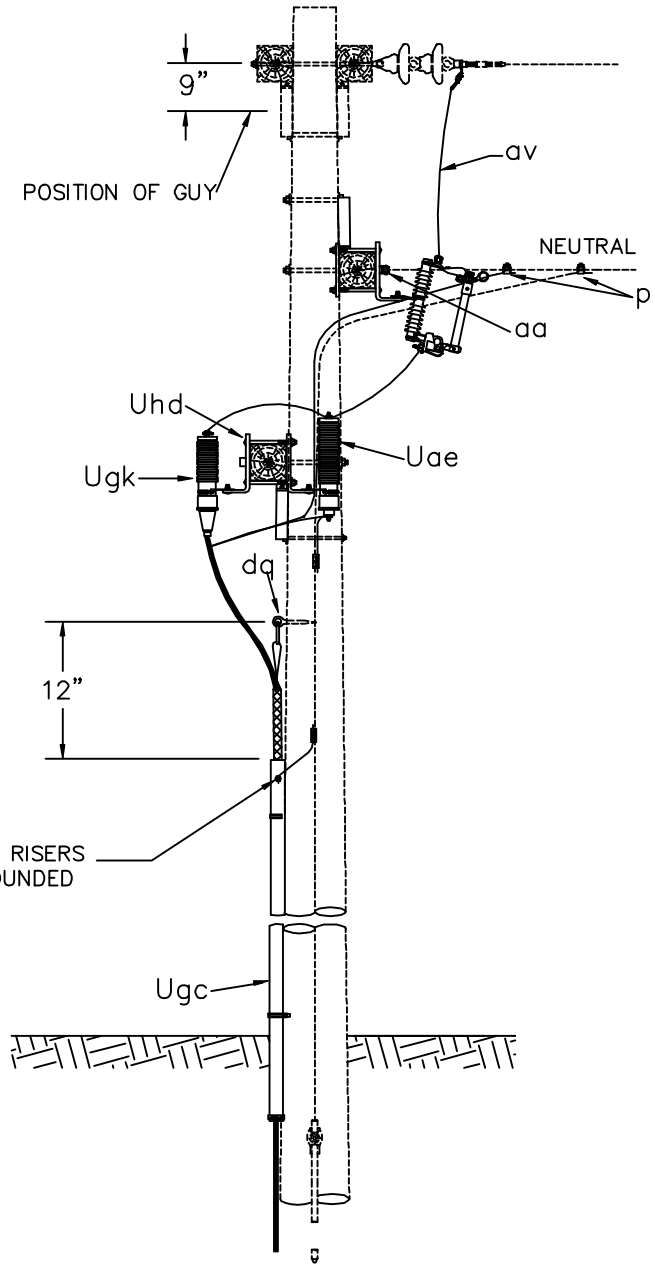


| ITEM | QTY. | MATERIAL |
|---|---|---|
| c | 2 | Bolt, machine, 5/8" x required length. |
| d | 2 | Washer, square 2 1/4". |
| g | 2 | Crossarm, 3 5/8" x 4 5/8" x 8'-0" |
| i | 4 | Bolt, carriage, 3/8" x 4 1/2" |
| j | | Screw, lag 1/2" x 4" as required. |
| p | | Connectors, as required. |
| | | |
| aa | 1 | Eyenuts, 5/8" |
| af | 2 | Cutout |
| al | | Staples, as required. |
| av | | Jumpers, as required. |
| bo | 1 | Anchor, shackle. |
| cu | 4 | Brace, wood, 28" |
| dq | 1 | Eye screw, elliptical or drive hook. |
| ek | 6 | Locknuts, as required. |
| | | |
| Uae | 2* | Surge arrester |
| Ugc | 1 | Cable riser shield. Length as required. |
| Ugk | 2 | Cable termination. |
| Uhc | 2 | Cable support. |
| Uhd | 2 | Crossarm mounting bracket. |

NOTES:

1. TOTAL ARRESTER LEAD LENGTH MUST BE UNDER 3'.
2. NO BENDS PERMITTED WITHIN 6" OF CABLE TERMINAL BASE.
3. ALLOW MINIMUM CABLE SLACK OF 24" AT BOTTOM OF RISERS.

VEE-PHASE CABLE TERMINAL POLE WITH CUTOUTS AND CROSSARM MOUNTING ARRESTERS

2000 UB1

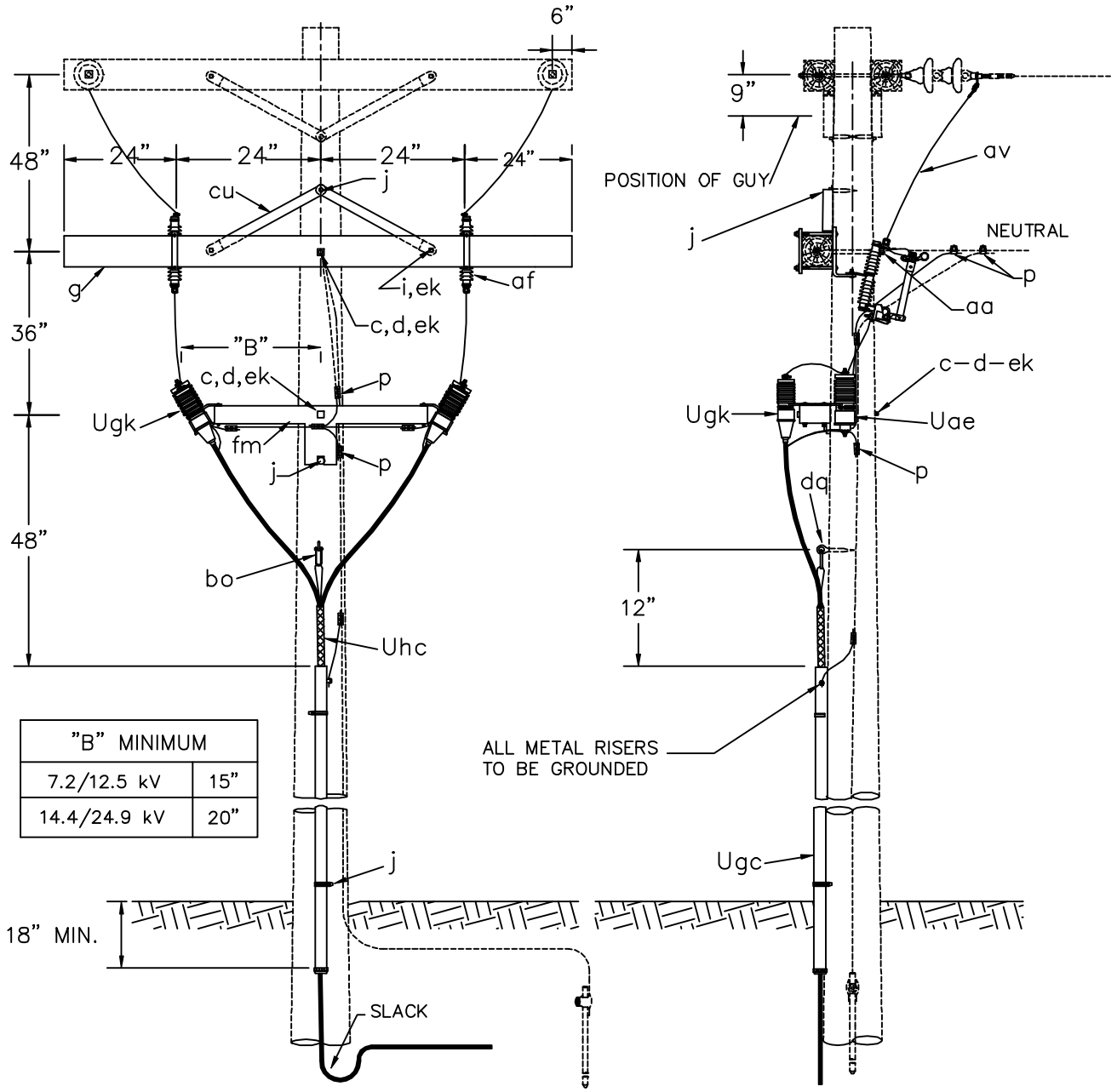


| ITEM | QTY. | MATERIAL |
|---|---|---|
| c | 2 | Bolt, machine, 5/8" x required length. |
| d | 2 | Washer, square 2 1/4". |
| g | 1 | Crossarm, 3 5/8" x 4 5/8" x 8'-0" |
| i | 2 | Bolt, carriage, 3/8" x 4 1/2" |
| j | | Screw, lag 1/2" x 4" as required. |
| p | | Connectors, as required. |
| aa | 1 | Eyenuts, 5/8" |
| af | 2 | Cutout |
| av | | Jumpers, as required. |
| bo | 1 | Anchor, shackle. |
| cu | 2 | Brace, wood, 28" |
| dq | 1 | Eye screw, elliptical or drive hook. |
| ek | 3 | Locknuts, as required. |
| fm | 1 | Mounting bracket. |
| | | |
| Uae | 2* | Surge arrester |
| Ugc | 1 | Cable riser shield. Length as required. |
| Ugk | 2 | Cable termination. |
| Uhc | 2 | Cable support. |

NOTES:

1. TOTAL ARRESTER LEAD LENGTH MUST BE UNDER 3'.
2. NO BENDS PERMITTED WITHIN 6" OF CABLE TERMINAL BASE.
3. ALLOW MINIMUM CABLE SLACK OF 24" AT BOTTOM OF RISER.

VEE-PHASE CABLE TERMINAL POLE WITH CUTOUTS AND BRACKET MOUNTING ARRESTERS

2000 UB2

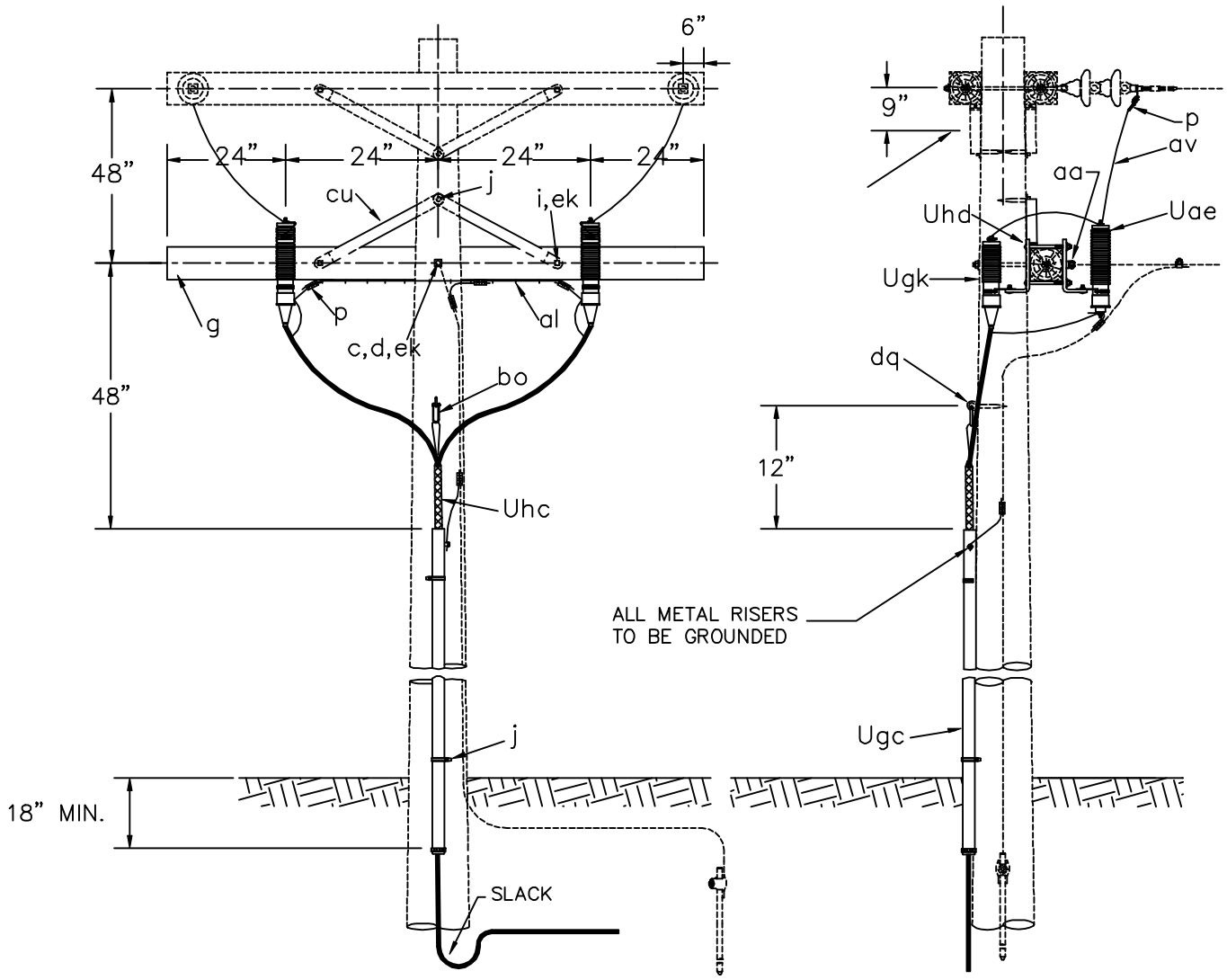


| ITEM | QTY. | MATERIAL |
|---|---|---|
| c | 1 | Bolt, machine, 5/8" x required length. |
| d | 1 | Washer, square 2 1/4". |
| g | 1 | Crossarm, 3 5/8" x 4 5/8" x 8'-0" |
| i | 2 | Bolt, carriage, 3/8" x 4 1/2" |
| j | | Screw, lag 1/2" x 4" as required. |
| p | | Connectors, as required. |
| | | |
| aa | 1 | Nut, eye, 5/8" |
| al | | Staples, as required. |
| av | | Jumpers, as required. |
| bo | 1 | Anchor, shackle. |
| cu | 2 | Brace, wood, 28" |
| dq | 1 | Eye screw, elliptical or drive hook. |
| ek | 3 | Locknuts, as required. |
| | | |
| Uae | 2* | Surge arrester |
| Ugc | 1 | Cable riser shield. Length as required. |
| Ugk | 2 | Cable termination. |
| Uhc | 2 | Cable support. |
| Uhd | 2 | Crossarm mounting bracket. |

NOTES:

1. TOTAL ARRESTER LEAD LENGTH MUST BE UNDER 3'.
2. NO BENDS PERMITTED WITHIN 6" OF CABLE TERMINAL BASE.
3. ALLOW MINIMUM CABLE SLACK OF 24" AT BOTTOM OF RISER.

VEE-PHASE CABLE TERMINAL POLE WITHOUT CUTOUT, WITH CROSSARM MOUNTING ARRESTERS

| | | |
|---|---|---|
| | 2000 | UB3 |

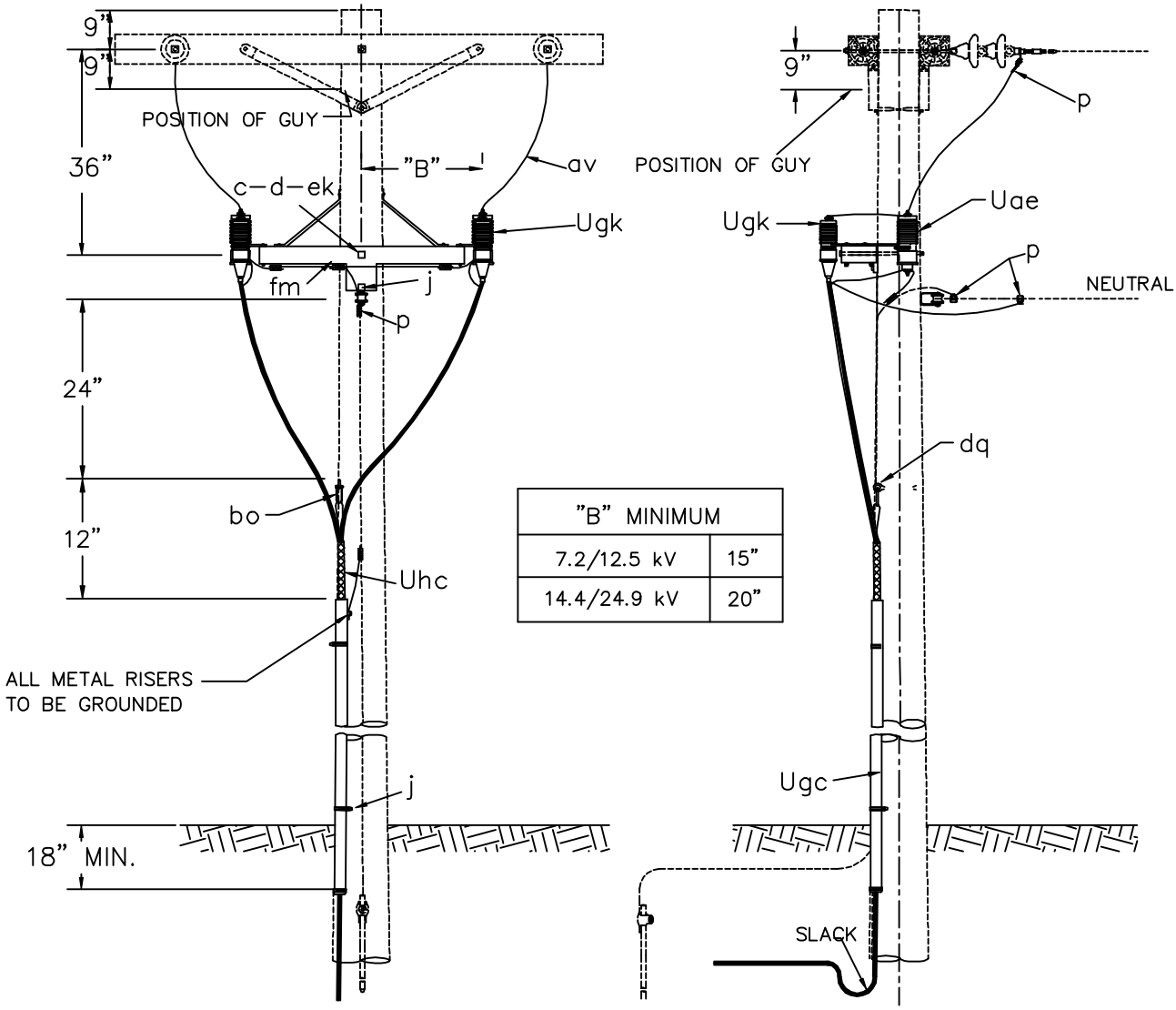


| "B" MINIMUM | |
|---|---|
| 7.2/12.5 kV | 15" |
| 14.4/24.9 kV | 20" |

| ITEM | QTY. | MATERIAL |
|---|---|---|
| c | 1 | Bolt, machine, 5/8" x required length. |
| d | 1 | Washer, square 2 1/4". |
| j | | Screw, lag 1/2" x 4" as required. |
| p | | Connectors, as required. |
| | | |
| av | | Jumpers, as required. |
| bo | 1 | Anchor, shackle. |
| dq | 1 | Eye screw, elliptical or drive hook. |
| ek | | Locknuts, as required. |
| fm | 1 | Mounting bracket. |
| | | |
| Uae | 2* | Surge arrester |
| Ugc | | Cable riser shield. Length as required. |
| Ugk | 2 | Cable termination. |
| Uhc | 2 | Cable support. |

NOTES:

1. TOTAL ARRESTER LEAD LENGTH MUST BE UNDER 3'.
2. NO BENDS PERMITTED WITHIN 6" OF CABLE TERMINAL BASE.
3. ALLOW MINIMUM CABLE SLACK OF 24" AT BOTTOM OF RISER.

VEE–PHASE CABLE TERMINAL POLE WITHOUT CUTOUT, WITH BRACKET MOUNTING ARRESTERS

2000 UB4

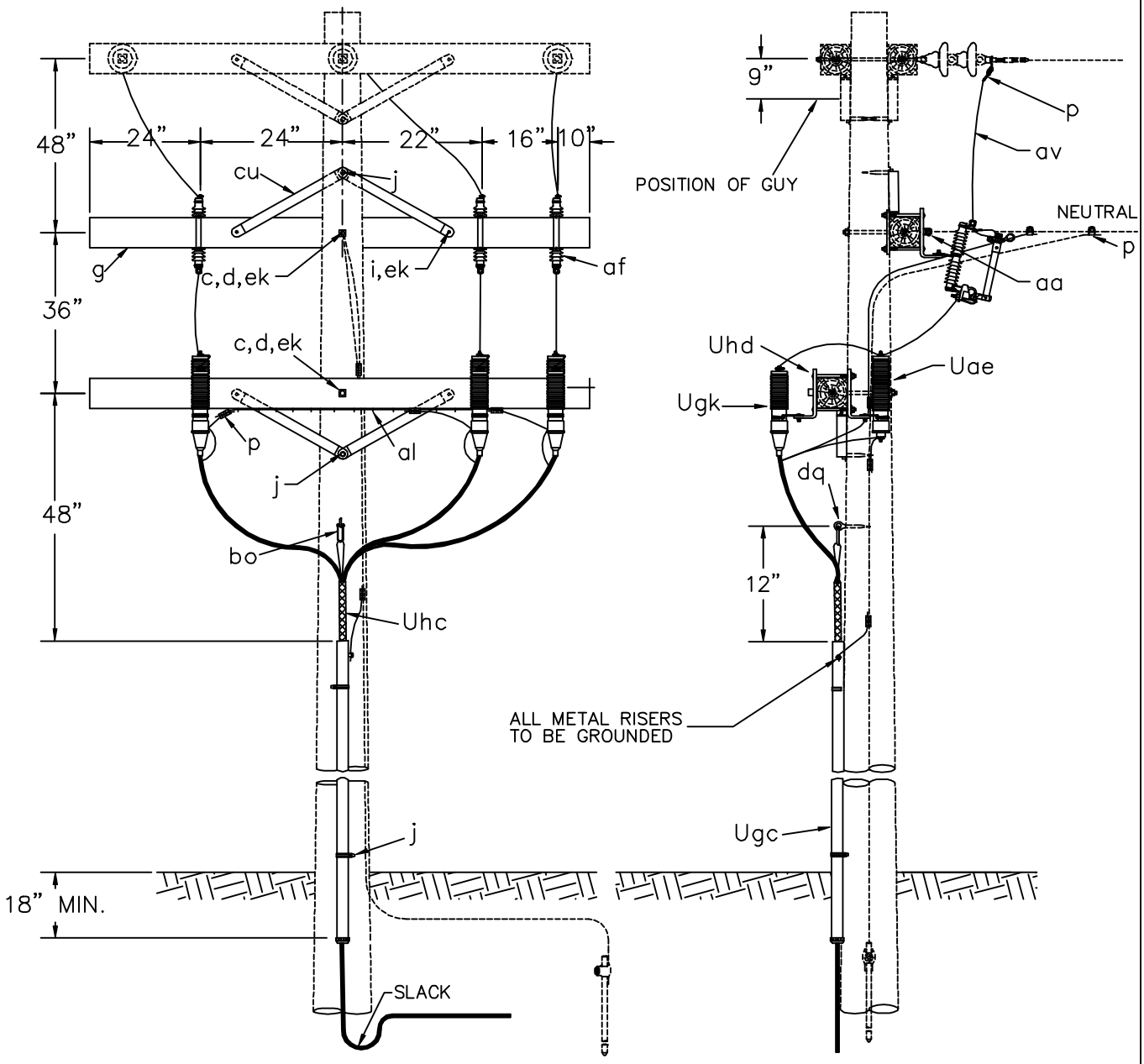


| ITEM | QTY. | MATERIAL |
|---|---|---|
| c | 2 | Bolt, machine, 5/8" x required length. |
| d | 2 | Washer, square 2 1/4". |
| g | 2 | Crossarm, 3 5/8" x 4 5/8" x 8'-0" |
| i | 4 | Bolt, carriage, 3/8" x 4 1/2" |
| j | | Screw, lag 1/2" x 4" as required. |
| p | | Connectors, as required. |
| | | |
| aa | 1 | Eyenut, 5/8" |
| af | 3 | Cutout |
| al | | Staples, as required. |
| av | | Jumpers, as required. |
| bo | 1 | Anchor, shackle. |
| cu | 4 | Brace, wood, 28" |
| dq | 1 | Eye screw, elliptical or drive hook. |
| ek | 6 | Locknuts, as required. |
| | | |
| Uae | 3* | Surge arrester |
| Ugc | 1 | Cable riser shield. Length as required. |
| Ugk | 3 | Cable termination. |
| Uhc | 3 | Cable support. |
| Uhd | 2 | Crossarm mounting bracket. |

NOTES:

1. TOTAL ARRESTER LEAD LENGTH MUST BE UNDER 3'.
2. NO BENDS PERMITTED WITHIN 6" OF CABLE TERMINAL BASE.
3. ALLOW MINIMUM CABLE SLACK OF 24" AT BOTTOM OF RISER.

THREE PHASE CABLE TERMINAL POLE WITH CUTOUTS AND CROSSARM MOUNTING ARRESTERS

| | | |
|---|---|---|
| | 2000 | UC1 |

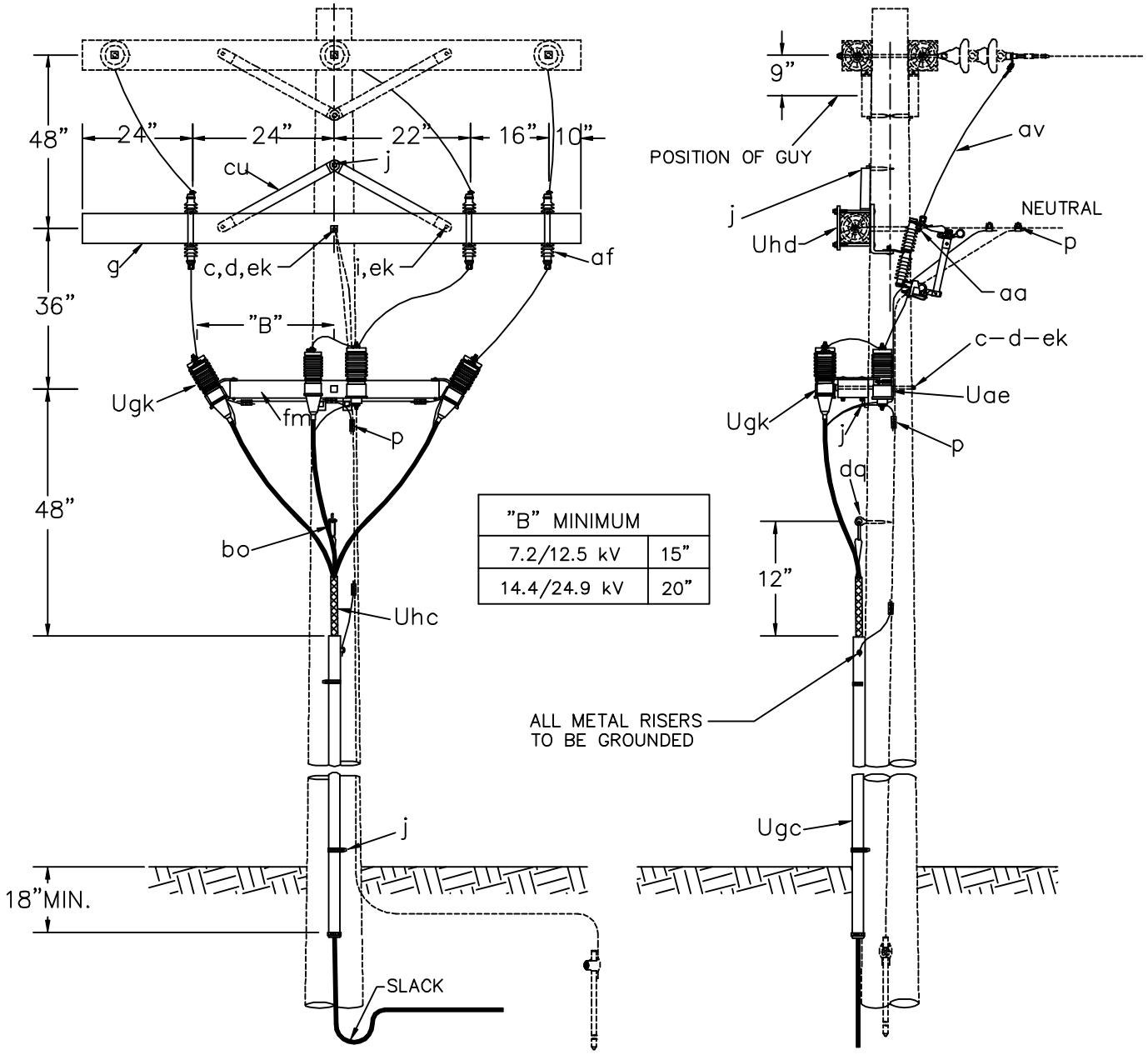


| "B" MINIMUM | |
|---|---|
| 7.2/12.5 kV | 15" |
| 14.4/24.9 kV | 20" |

| ITEM | QTY. | MATERIAL |
|---|---|---|
| c | 2 | Bolt, machine, 5/8" x required length. |
| d | 2 | Washer, square 2 1/4". |
| g | 1 | Crossarm, 3 5/8" x 4 5/8" x 8'–0" |
| i | 2 | Bolt, carriage, 3/8" x 4 1/2" |
| j | | Screw, lag 1/2" x 4" as required. |
| p | | Connectors, as required. |
| | | |
| aa | 1 | Eyenut, 5/8" |
| af | 3 | Cutout |
| av | | Jumpers, as required. |
| bo | 1 | Anchor, shackle. |
| cu | 2 | Brace, wood, 28" |
| dq | 1 | Eye screw, elliptical or drive hook. |
| ek | 4 | Locknuts, as required. |
| fm | 1 | Mounting bracket. |
| | | |
| Uae | 3* | Surge arrester |
| Ugc | 1 | Cable riser shield. Length as required. |
| Ugk | 3 | Cable termination. |
| Uhc | 3 | Cable support. |

NOTES:

1. TOTAL ARRESTER LEAD LENGTH MUST BE UNDER 3'.
2. NO BENDS PERMITTED WITHIN 6" OF CABLE TERMINAL BASE.
3. ALLOW MINIMUM CABLE SLACK OF 24" AT BOTTOM OF RISER.

THREE PHASE CABLE TERMINAL POLE WITH CUTOUTS AND BRACKET MOUNTING ARRESTERS

2000 | UC2

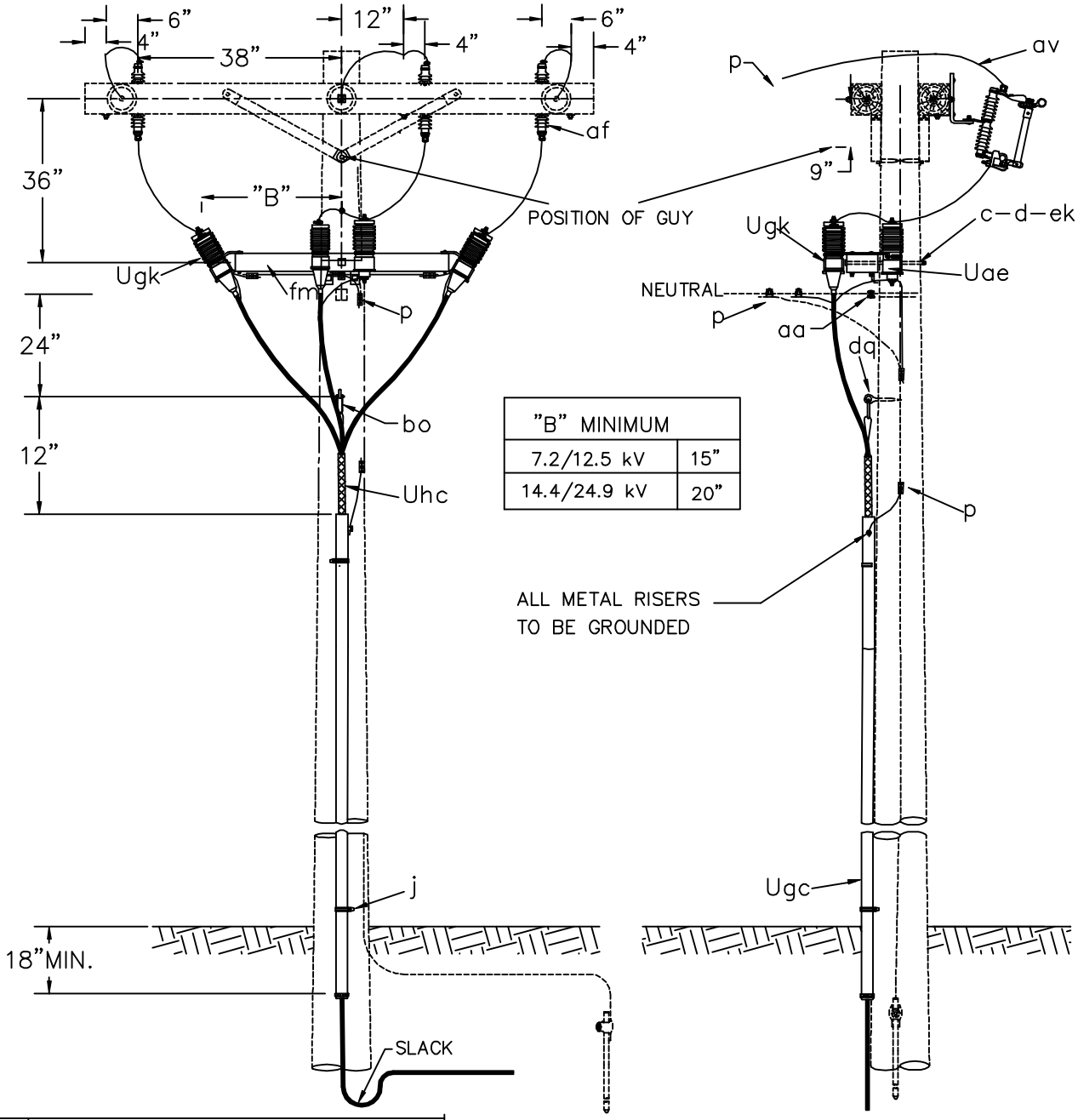


| "B" MINIMUM | |
|---|---|
| 7.2/12.5 kV | 15" |
| 14.4/24.9 kV | 20" |

| ITEM | QTY. | MATERIAL |
|---|---|---|
| a | 3 | Insulator, pin type |
| c | 1 | Bolt, machine, 5/8" x required length. |
| d | 1 | Washer, square 2 1/4". |
| f | 3 | Pin, crossarm |
| j | | Screw, lag 1/2" x 4" as required. |
| p | | Connectors, as required. |
| | | |
| aa | 1 | Eyenut, 5/8" |
| af | 3 | Cutout |
| av | | Jumpers, as required. |
| bo | 1 | Anchor, shackle. |
| dq | 1 | Eye screw, elliptical or drive hook. |
| ek | | Locknuts, as required. |
| fm | 1 | Mounting bracket. |
| | | |
| | | |
| Uae | 3* | Surge arrester |
| Ugc | 1 | Cable riser shield. Length as required. |
| Ugk | 3 | Cable termination. |
| Uhc | 3 | Cable support. |

NOTES:

1. TOTAL ARRESTER LEAD LENGTH MUST BE UNDER 3'.
2. NO BENDS PERMITTED WITHIN 6" OF CABLE TERMINAL BASE.
3. ALLOW MINIMUM CABLE SLACK OF 24" AT BOTTOM OF RISER.

THREE PHASE CABLE DEADEND TERMINAL POLE

2000 UC2–1

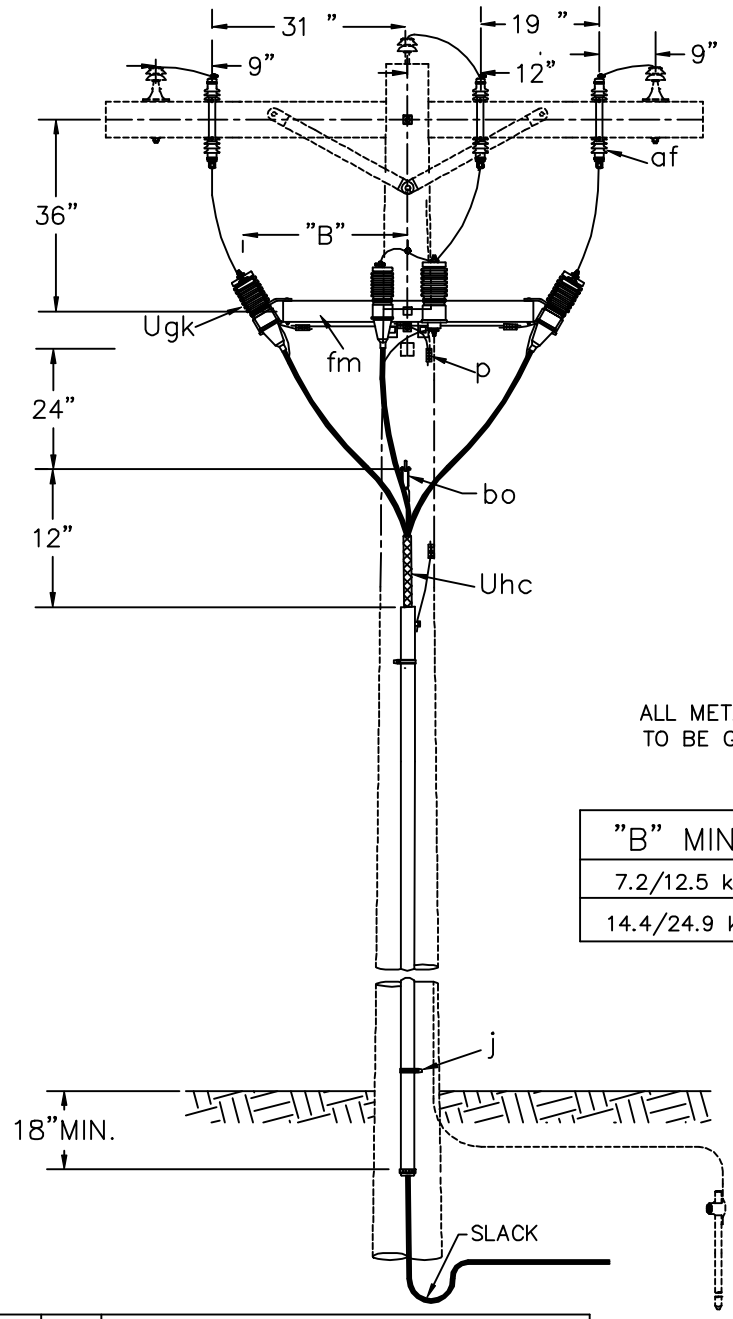


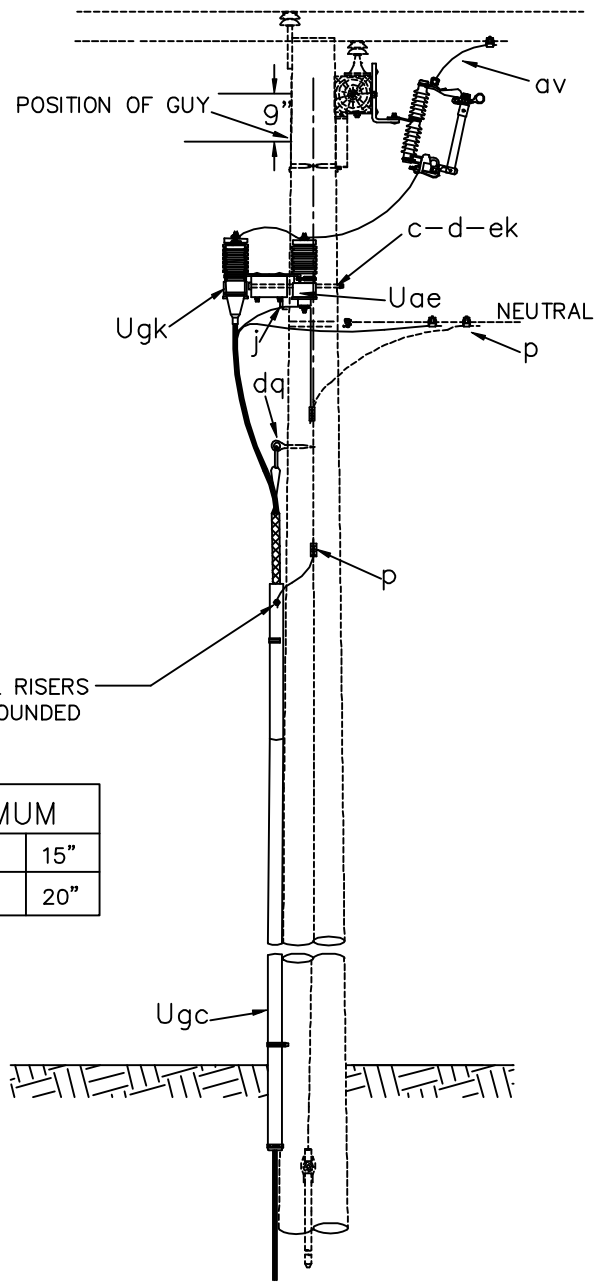


| "B" MINIMUM | |
|---|---|
| 7.2/12.5 kV | 15" |
| 14.4/24.9 kV | 20" |

| ITEM | QTY. | MATERIAL |
|---|---|---|
| c | 1 | Bolt, machine, 5/8" x required length. |
| d | 1 | Washer, square 2 1/4". |
| j | | Screw, lag 1/2" x 4" as required. |
| p | | Connectors, as required. |
| | | |
| | | |
| | | |
| aa | 1 | Eyenut, 5/8" |
| af | 3 | Cutout |
| av | | Jumpers, as required. |
| bo | 1 | Anchor, shackle. |
| dq | 1 | Eye screw, elliptical or drive hook. |
| ek | | Locknuts, as required. |
| fm | 1 | Mounting bracket. |
| | | |
| | | |
| Uae | 3* | Surge arrester |
| Ugc | 1 | Cable riser shield. Length as required. |
| Ugk | 3 | Cable termination. |
| Uhc | 3 | Cable support. |

NOTES:

1. TOTAL ARRESTER LEAD LENGTH MUST BE UNDER 3'.
2. NO BENDS PERMITTED WITHIN 6" OF CABLE TERMINAL BASE.
3. ALLOW MINIMUM CABLE SLACK OF 24" AT BOTTOM OF RISER.

THREE PHASE CABLE
TANGENT TERMINAL POLE

2000 | UC2–2

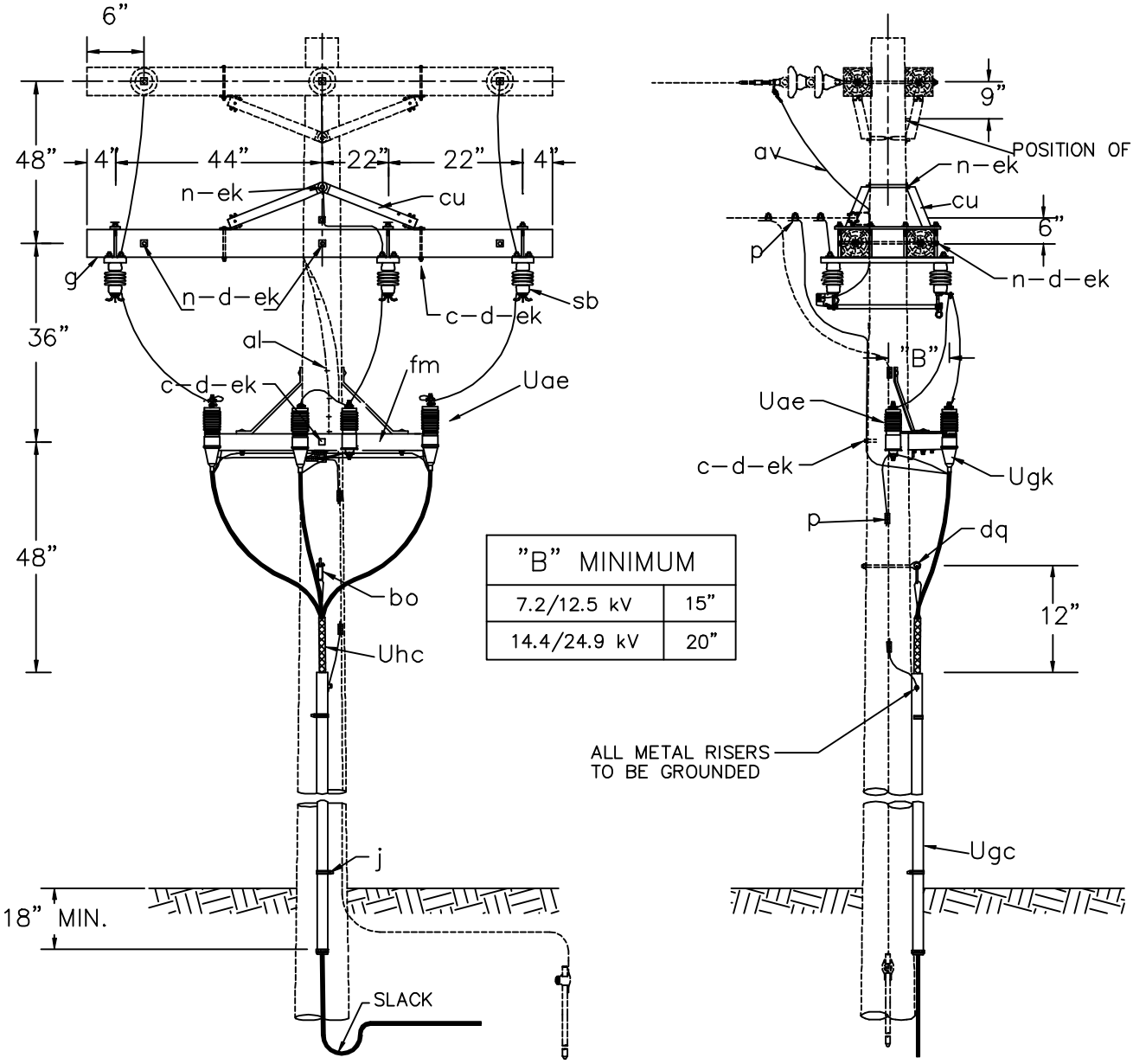


| "B" MINIMUM | |
|---|---|
| 7.2/12.5 kV | 15" |
| 14.4/24.9 kV | 20" |

| ITEM | QTY. | MATERIAL |
|---|---|---|
| c | 5 | Bolt, machine, 5/8" x as required |
| d | 4 | Washer, 1 3/8" x 9/16" round |
| d | 12 | Washer, 2 1/2" square |
| g | 2 | Crossarm, 3 5/8" x 4 5/8" x 8'–0" |
| j | | Screw, lag 1/2" x 4", as required |
| n | 4 | Bolt, double arming, 5/8" x req'd length |
| p | | Connectors, as required. |
| al | | Staples, as required. |
| av | | Jumpers, as required. |
| bo | 1 | Anchor, shackle. |
| cu | 4 | Brace, crossarm 60" span |
| dq | 1 | Eye screw, elliptical or drive hook. |
| ek | 16 | Locknuts, as required. |
| fm | 1 | Bracket, pothead–arrester 3 phase |
| sb | 3 | Disconnect, 600 A load break |
| Uae | 3 | Surge arrester |
| Ugc | 1 | Cable riser shield. Length as required. |
| Ugk | 3 | Cable termination. |
| Uhc | 3 | Grips |

NOTES:

1. TOTAL ARRESTER LEAD LENGTH MUST BE UNDER 3'.
2. NO BENDS PERMITTED WITHIN 6" OF CABLE TERMINAL BASE.
3. ALLOW MINIMUM CABLE SLACK OF 24" AT BOTTOM OF RISER.

THREE PHASE CABLE DEADEND
TERMINAL POLE WITH
DISCONNECT SWITCHES

2000 | UC5–1

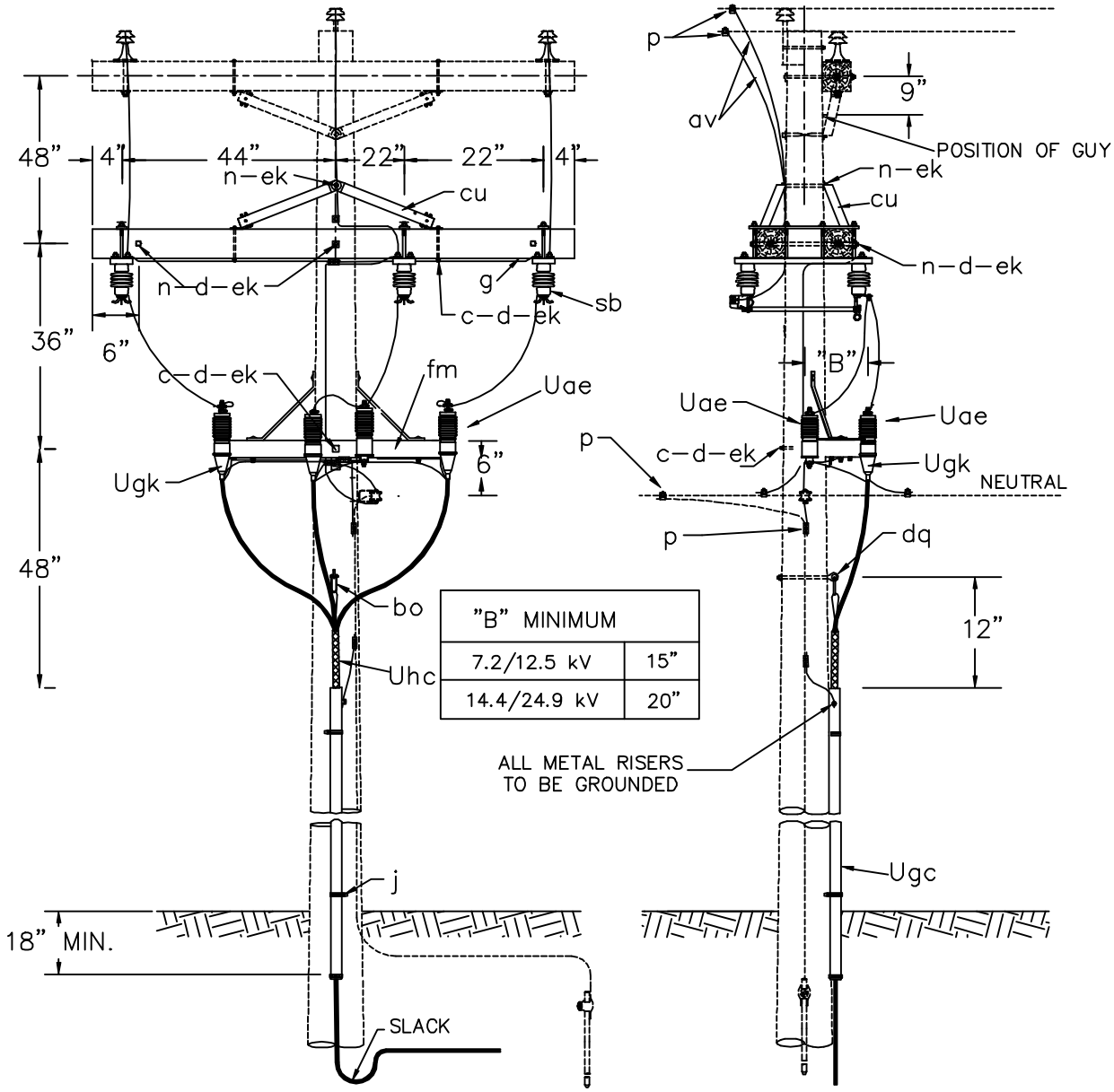


| "B" MINIMUM | |
|---|---|
| 7.2/12.5 kV | 15" |
| 14.4/24.9 kV | 20" |

| ITEM | QTY. | MATERIAL |
|---|---|---|
| c | 4 | Bolt, machine, 5/8" x as required |
| d | 4 | Washer, 1 3/8" x 9/16" round |
| d | 12 | Washer, 2 1/2" square |
| g | 2 | Crossarm, 3 5/8" x 4 5/8" x 8'–0" |
| j | | Screw, lag 1/2" x 4", as required |
| n | 4 | Bolt, double arming, 5/8" x req'd length |
| p | | Connectors, as required. |
| al | | Staples, as required. |
| av | | Jumpers, as required. |
| bo | 1 | Anchor, shackle. |
| cu | 4 | Brace, crossarm 60" span |
| dq | 1 | Eye screw, elliptical or drive hook. |
| ek | | Locknuts, as required. |
| fm | 1 | Bracket, pothead–arrester 3 phase |
| sb | 3 | Disconnect, 600 A load break |
| Uae | 3 | Surge arrester |
| Ugc | | Cable riser shield. Length as required. |
| Ugk | 3 | Cable termination. |
| Uhc | 3 | Grips |

NOTES:

1. TOTAL ARRESTER LEAD LENGTH MUST BE UNDER 3'.
2. NO BENDS PERMITTED WITHIN 6" OF CABLE TERMINAL BASE.
3. ALLOW MINIMUM CABLE SLACK OF 24" AT BOTTOM OF RISER.

THREE PHASE CABLE TANGENT TERMINAL POLE WITH DISCONNECT SWITCHES

2000 | UC6–1

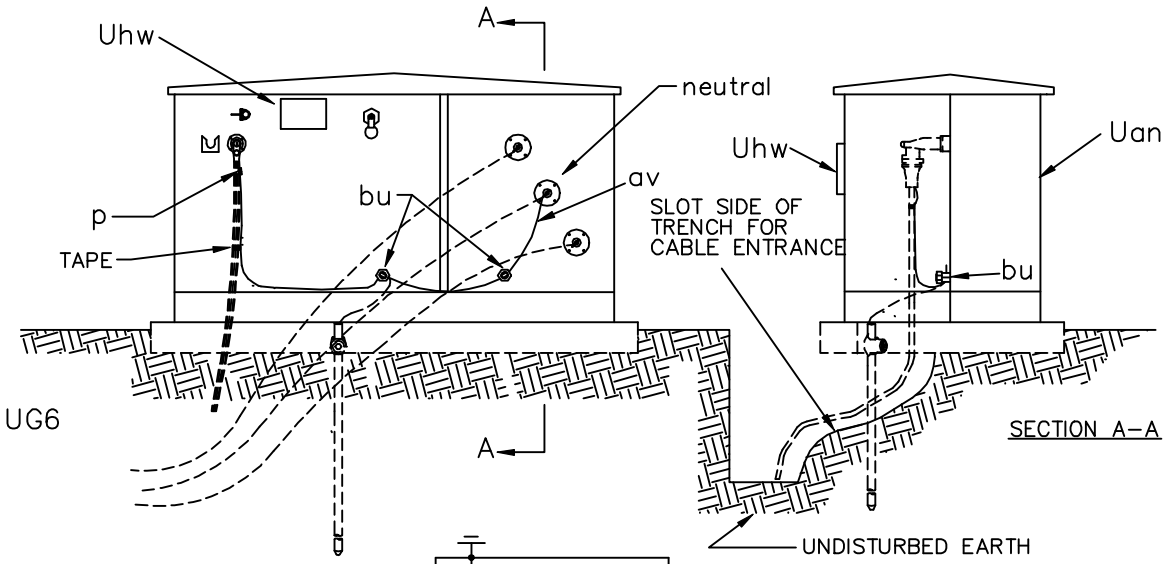


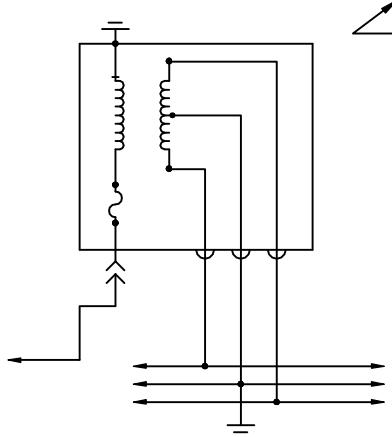

WIRING DIAGRAM
UG6

DESIGNATE AS:

| TRANSFORMER WITHOUT SECONDARY BREAKERS | TRANSFORMER WITH SECONDARY BREAKERS | |
|---|---|---|
| UG6 | UG6B | SINGLE TERMINATION TYPE WITH INTERNAL FUSE |

| ITEM | QTY. | MATERIAL |
|---|---|---|
| p | | Connectors, as required |
| | | |
| av | | Jumpers, copper as required |
| bu | 2 | Connector, equipment ground |
| Uan | 1 | Transformer, pad mounted, single primary |
| | | load break bushing and internal fuse |
| | | (UG6 & UG6B). |
| | | |
| | | |
| | | |
| Uhw | 2 | Signs, "DANGER" and "WARNING" |
| | | |
| | | Tape, as required |

NOTES:

1. PROVIDE SUFFICIENT PRIMARY NEUTRAL PIGTAIL AND CABLE SLACK TO PERMIT READY DISCONNECTION OF ELBOW AND MOUNTING ON PARKING STAND. TRAIN CABLES AS SHOWN.
2. INSTALL WITH UNIT UM48–1 OR OTHER GROUNDING UNIT TO BE SPECIFIED SEPARATELY.
3. SPECIFY PAD OR SLEEVE SEPARATELY.
4. INSTALL "DANGER" SIGN ON TRANSFORMER INSIDE ENCLOSURE. INSTALL "WARNING" SIGN ON OUTSIDE SURFACE OF ENCLOSURE.

SINGLE PHASE
PAD–MOUNTED TRANSFORMER
( RADIAL FEED )

2000 | UG6, UG6B

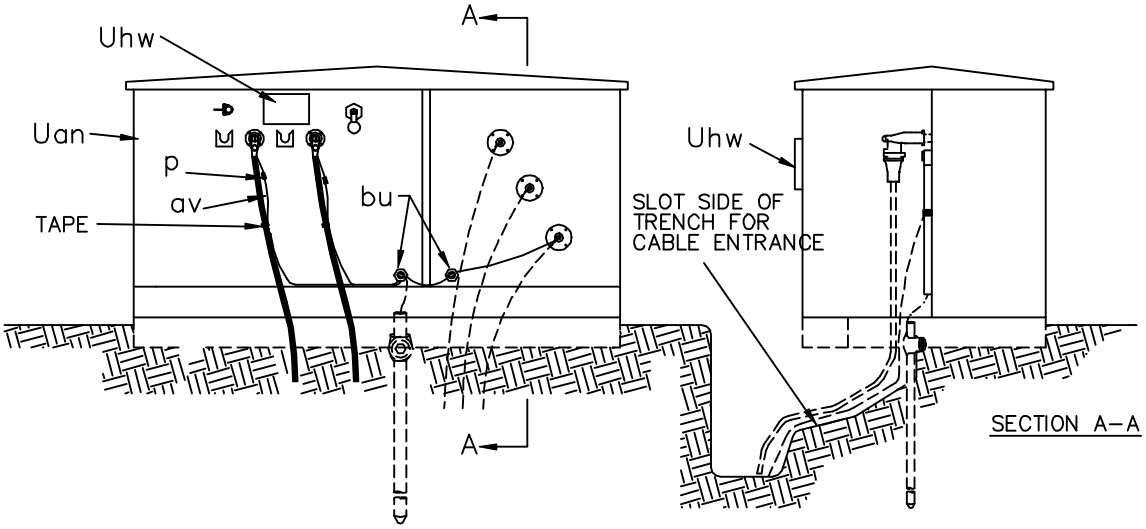


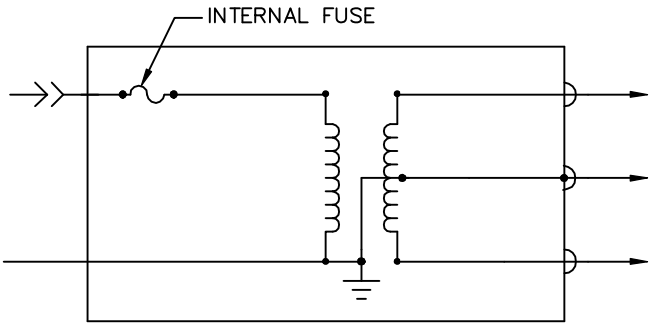


WIRING DIAGRAM
UG7

DESIGNATE AS:

| TRANSFORMER WITHOUT SECONDARY BREAKERS | TRANSFORMER WITH SECONDARY BREAKERS | |
|---|---|---|
| UG7 | UG17B | UNIT WITH INTERNAL FUSE |
| | | |

| ITEM | QTY. | MATERIAL |
|---|---|---|
| p | | Connectors, as required |
| av | | Jumpers, copper as required |
| bu | 2 | Connector, equipment ground |
| | | |
| Uan | 1 | Transformer, pad mounted, single phase |
| | | with one load break bushing per phase |
| | | and internal fuses (UG7 & UG17B) |
| Uhw | 2 | Signs, "DANGER" and "WARNING" |
| Uhp | 1 | Elbow Termination |
| | | Ground wire (See Note #3) |
| | | Tape, as required |
| | | |

NOTES:

1. PROVIDE SUFFICIENT PRIMARY NEUTRAL PIGTAIL AND CABLE SLACK TO PERMIT READY DISCONNECTION OF ELBOW AND MOUNTING ON PARKING STAND. TRAIN CABLES AS SHOWN.
2. INSTALL WITH UNIT UM48–1 OR OTHER GROUNDING UNIT TO BE SPECIFIED SEPARATELY.
3. SPECIFY PAD OR SLEEVE UNIT SEPARATELY.
4. INSTALL "DANGER" SIGN ON TRANSFORMER AND "WARNING" SIGN ON ENCLOSURE.

SINGLE PHASE
PAD MOUNTED TRANSFORMER
( LOOP FEED )

2000

UG7
UG7B

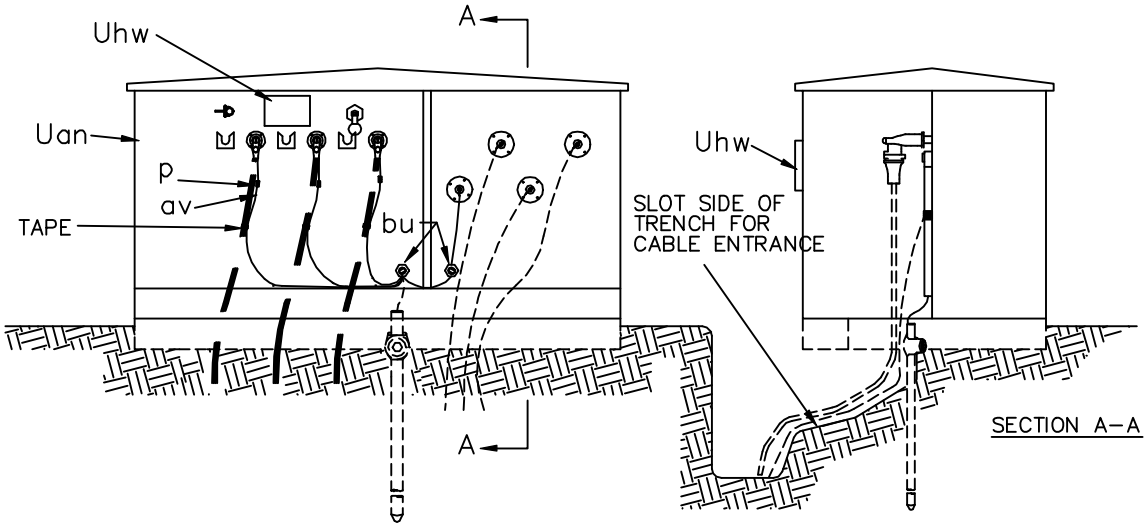


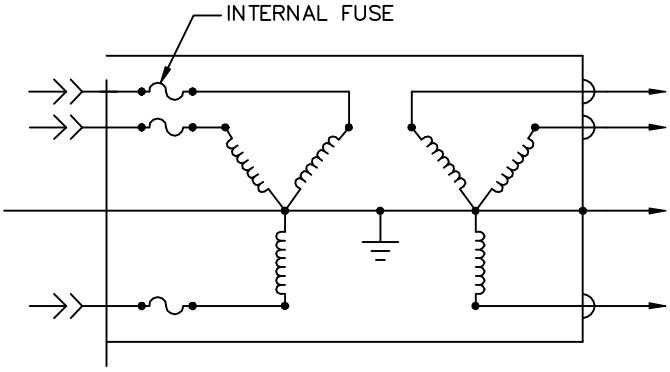


WIRING DIAGRAM
UG 17

DESIGNATE AS:

| TRANSFORMER WITHOUT SECONDARY BREAKERS | TRANSFORMER WITH SECONDARY BREAKERS | |
|---|---|---|
| UG17 | UG17B | UNIT WITH INTERNAL FUSE |

NOTES:

1. ONLY THE WYE–WYE CONNECTION SHOULD BE USED TO MINIMIZE FERRO–RESONANCE.
2. PROVIDE SUFFICIENT PRIMARY NEUTRAL PIGTAIL AND CABLE SLACK TO PERMIT READY DISCONNECTION OF ELBOW AND MOUNTING ON PARKING STAND. TRAIN CABLES AS SHOWN.
3. INSTALL WITH UNIT UM48–1 OR OTHER GROUNDING UNIT TO BE SPECIFIED SEPARATELY.
4. SPECIFY PAD OR SLEEVE UNIT SEPARATELY.
5. INSTALL "DANGER" SIGN ON TRANSFORMER INSIDE ENCLOSURE. INSTALL "WARNING" SIGN ON OUTSIDE SURFACE OF ENCLOSURE.
6. THREE PHASE SWITCHING OF PRIMARY SHOULD BE INSTALLED WHERE FERRORESONANCE MAY OCCUR.

| ITEM | QTY. | MATERIAL |
|---|---|---|
| p | | Connectors, as required |
| av | | Jumpers, copper as required |
| bu | 2 | Connector, equipment ground |
| | | |
| Uan | 1 | Transformer, pad mounted, three phase |
| | | with one load break bushing per phase |
| | | and internal fuses (UG17 & UG17B) |
| | | |
| Uhw | 2 | Signs, "DANGER" and "WARNING" |
| Uhp | 3 | Elbow Termination |
| | | Ground wire (See Note #3) |
| | | Tape, as required |

THREE PHASE PAD MOUNTED TRANSFORMER
( RADIAL FEED )

2000

UG17
UG17B

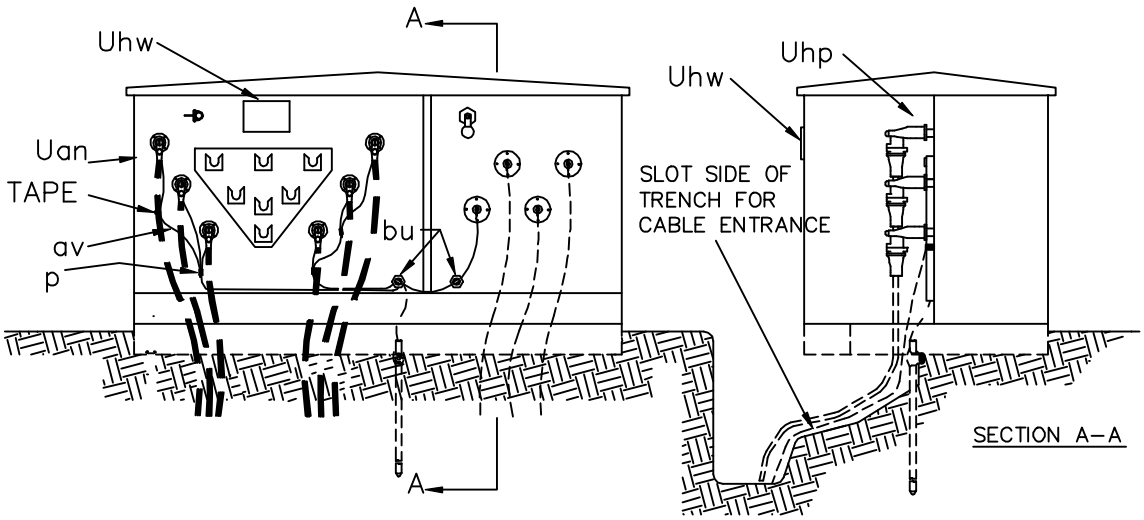


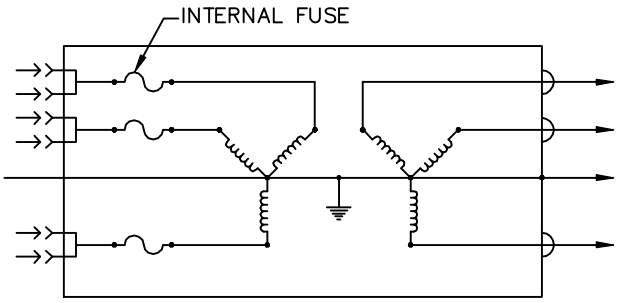


WIRING DIAGRAM
UG17–2

DESIGNATE AS:

| TRANSFORMER WITHOUT SECONDARY BREAKERS | TRANSFORMER WITH SECONDARY BREAKERS | |
|---|---|---|
| UG17–2 | UG17–2B | UNIT WITH INTERNAL FUSE |

NOTES:

1. ONLY THE WYE–WYE CONNECTION SHOULD BE USED TO AVOID FERRORESONANCE.
2. PROVIDE SUFFICIENT PRIMARY NEUTRAL PIGTAIL AND CABLE SLACK TO PERMIT READY DISCONNECTION OF ELBOW AND MOUNTING ON PARKING STAND. TRAIN CABLES AS SHOWN.
3. INSTALL WITH GROUNDING ASSEMBLY TO BE SPECIFIED.
4. SPECIFY kVA SIZE OF TRANSFORMER.
5. SPECIFY PAD OR SLEEVE UNIT SEPARATELY.
6. INSTALL "DANGER" SIGN ON TRANSFORMER INSIDE ENCLOSURE. INSTALL "WARNING" SIGN ON OUTSIDE SURFACE OF ENCLOSURE.

| ITEM | QTY. | MATERIAL |
|---|---|---|
| p | | Connectors, as required |
| | | |
| av | | Jumpers, copper, as required |
| bu | 2 | Connector, equipment ground |
| | | |
| Uan | 1 | Transformer, pad mounted, three phase |
| | | with two load break bushings per phase |
| | | and internal fuse. |
| Uhw | 2 | Signs, "DANGER" and "WARNING" |
| Uhp | 6 | Elbow termination |
| | | Tape, as required |
| | | Ground wire (See Note #3) |

THREE PHASE
PAD MOUNTED TRANSFORMER
( LOOP FEED )

2000

UG17–2
UG17–2B

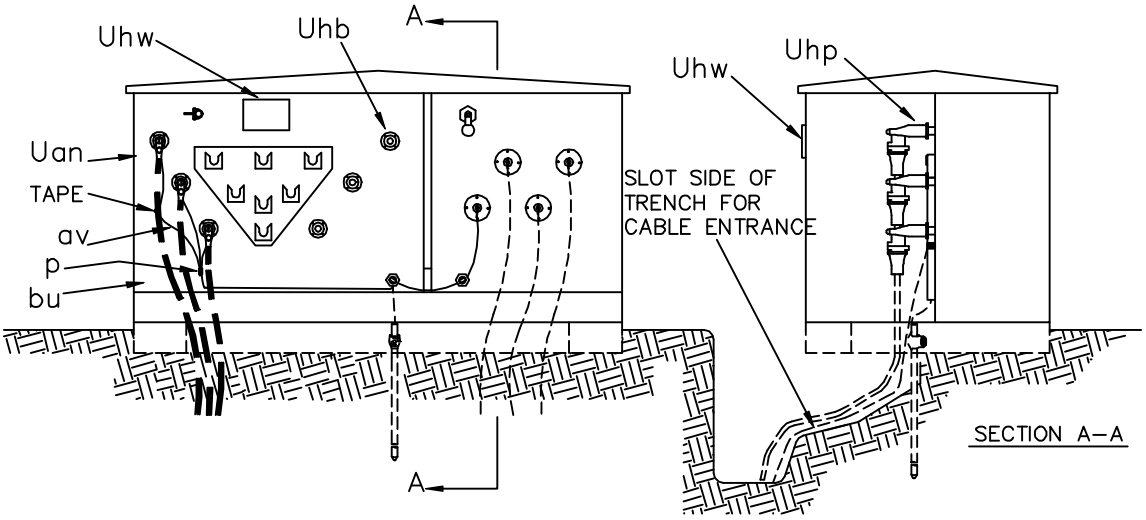


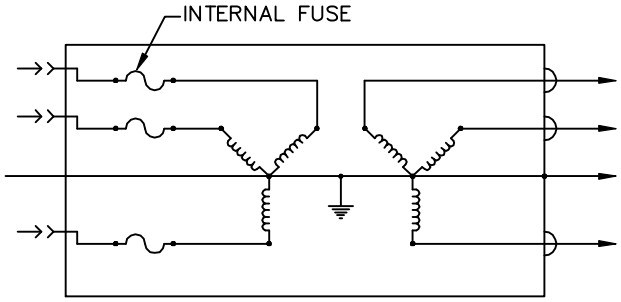


WIRING DIAGRAM

DESIGNATE AS:

| TRANSFORMER WITHOUT SECONDARY BREAKERS | TRANSFORMER WITH SECONDARY BREAKERS | |
|---|---|---|
| UG17–3 | UG17–3B | UNIT WITH INTERNAL FUSE |

| ITEM | QTY. | MATERIAL |
|---|---|---|
| p | | Connectors, as required |
| | | |
| av | | Jumpers, copper, as required |
| bu | 2 | Connector, equipment ground |
| | | |
| Uan | 1 | Transformer, pad mounted, three phase, |
| | | with two load break bushings per phase |
| | | and internal fuse. |
| Uhb | 3 | Insulated covers |
| Uhw | 2 | Signs, "DANGER" and "WARNING" |
| Uhp | 3 | Elbow termination |
| | | Tape, as required |
| | | Ground wire (See Note #3) |

NOTES:

1. ONLY THE WYE–WYE CONNECTION SHOULD BE USED TO AVOID FERRORESONANCE.
2. PROVIDE SUFFICIENT PRIMARY NEUTRAL PIGTAIL AND CABLE SLACK TO PERMIT READY DISCONNECTION OF ELBOW AND MOUNTING ON PARKING STAND. TRAIN CABLES AS SHOWN.
3. INSTALL WITH GROUNDING ASSEMBLY TO BE SPECIFIED SEPARATELY.
4. SPECIFY PAD OR SLEEVE UNIT SEPARATELY.
5. INSTALL "DANGER" SIGN ON TRANSFORMER INSIDE ENCLOSURE. INSTALL "WARNING " SIGN ON OUTSIDE SURFACE OF ENCLOSURE.

THREE PHASE
PAD MOUNTED LOOP FEED
TRANSFORMER WITH RADIAL FEED

2000

UG17–3
UG17–3B

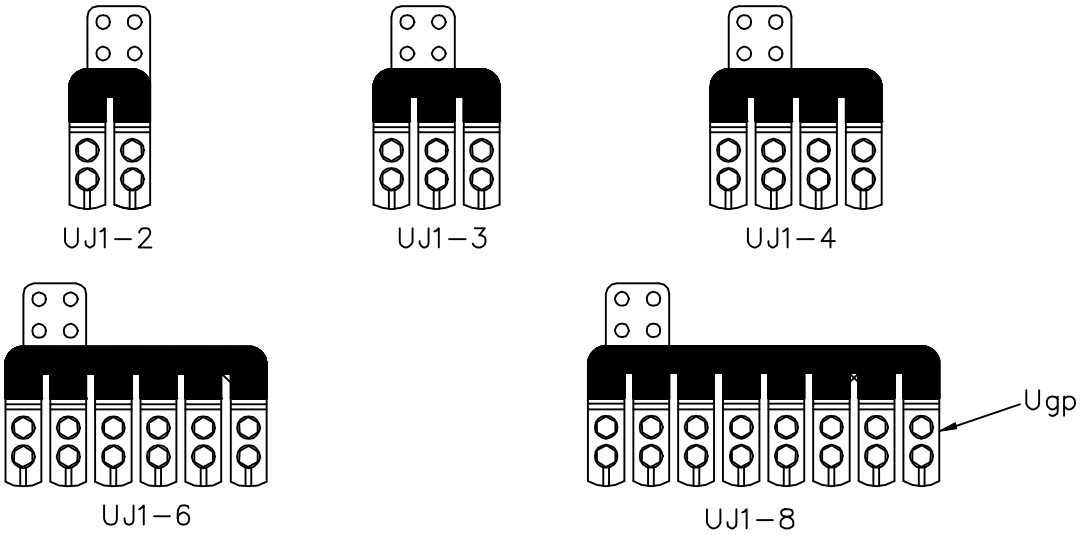


CONNECTOR BLOCKS

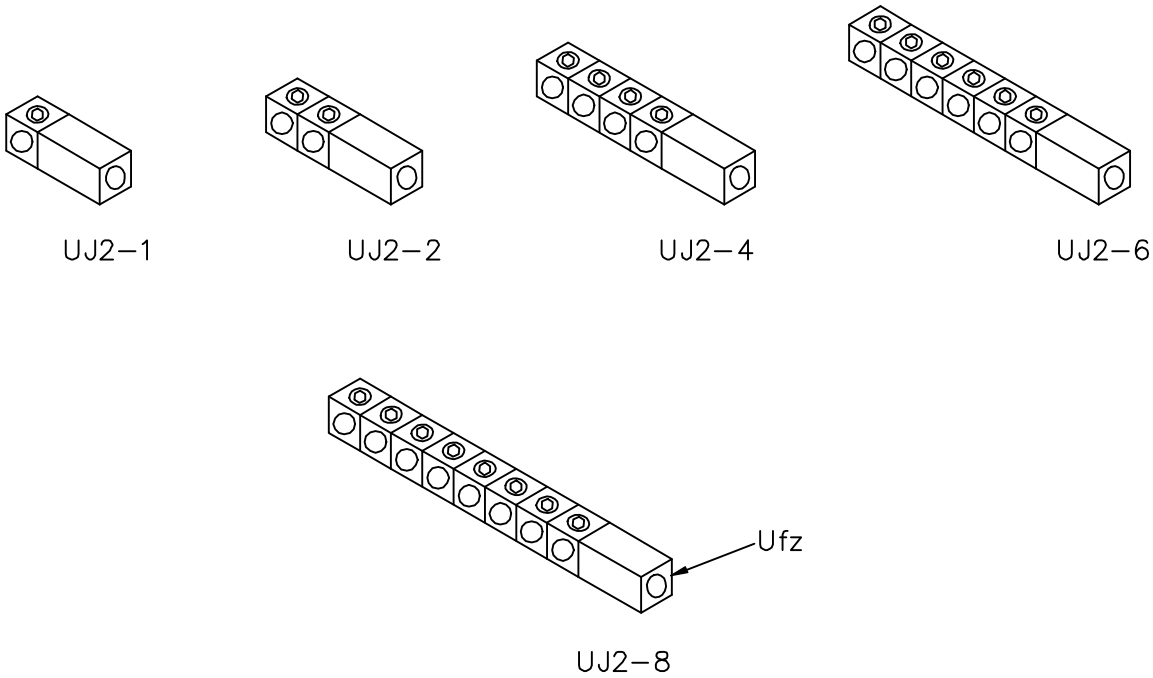


TRANSFORMER CONNECTOR BLOCKS

NOTE: Insulated covers are not shown.

| ITEM | QTY. | MATERIAL |
|---|---|---|
| Ufz | | Transformer connector blocks, |
| | | as required |
| Ugp | | Connector blocks, as required |
| | | |

SECONDARY CONNECTOR BLOCKS

2000

UJ1–___
UJ2–___

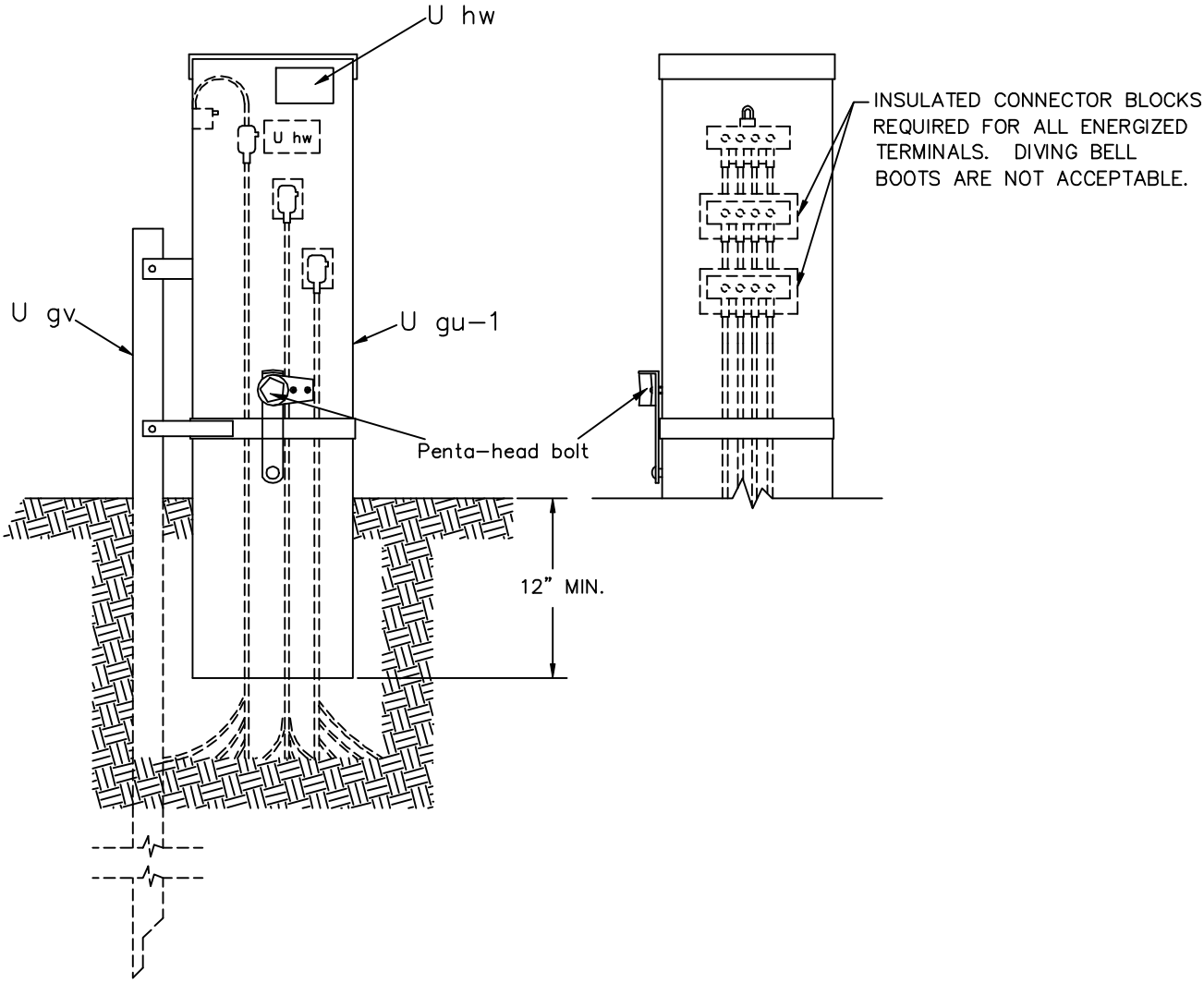


NOTES:

1. INSTALL "WARNING" SIGN ON OUTSIDE OF PEDESTAL.
2. ITEM Ugv OPTIONAL – SEE PEDESTAL MANUFACTURER'S SPECIFICATIONS AND RECOMMENDATIONS.
3. ALL PEDESTALS SHALL BE GROUNDED IN ACCORANCE WITH THE NATIONAL ELECTRICAL SAFETY CODE (NESC).

| ITEM | QTY. | MATERIAL |
|---|---|---|
| Ugu–1 | 1 | Power pedestal |
| Ugv | 1 | Stake (if necessary) |
| Uhw | 1 | Sign, "WARNING" (outside pedestal) |
| Uhw | 1 | Sign, "DANGER" (inside pedestal) |

SECONDARY PEDESTAL
UNDERGROUND CABLE

2000 UK5

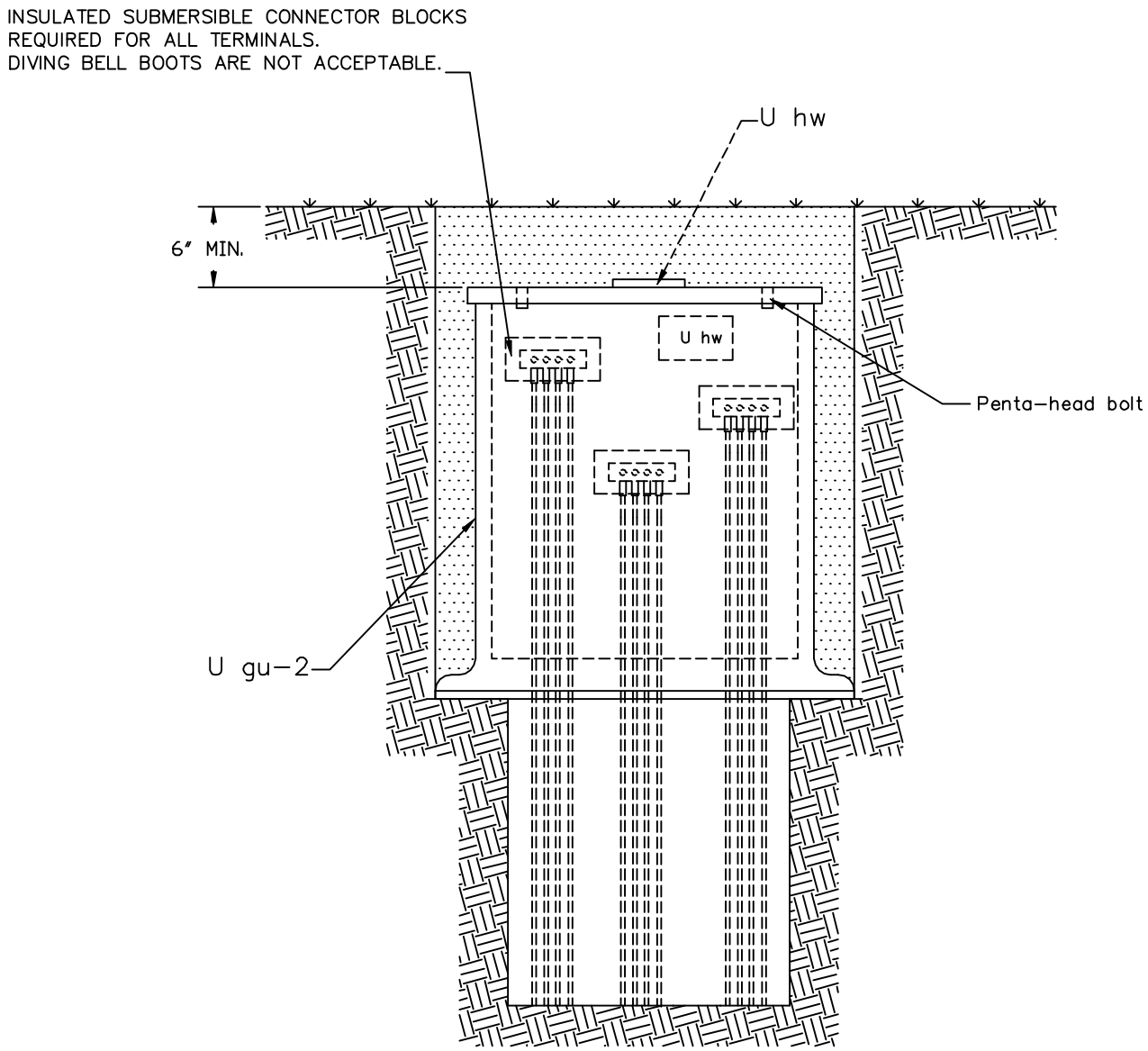


NOTES:

1. OWNER TO SPECIFY WHETHER UNIT IS TO BE BURIED AS SHOWN OR INSTALLED FLUSH WITH FINAL GRADE. METAL COVER IF USED SHOULD BE GROUNDED.

2. ALL PEDESTALS SHALL BE GROUNDED IN ACCORDANCE WITH THE NATIONAL ELECTRICAL SAFETY CODE (NESC).

| ITEM | QTY. | MATERIAL |
|---|---|---|
| U gu-2 | 1 | Power pedestal, buried type |
| U hw | 1 | Sign, "DANGER" (inside pedestal) |
| U hw | 1 | Sign, "WARNING" (outside pedestal) |
| | | |

SECONDARY HANDHOLE
UNDERGROUND CABLE

2000 UK6

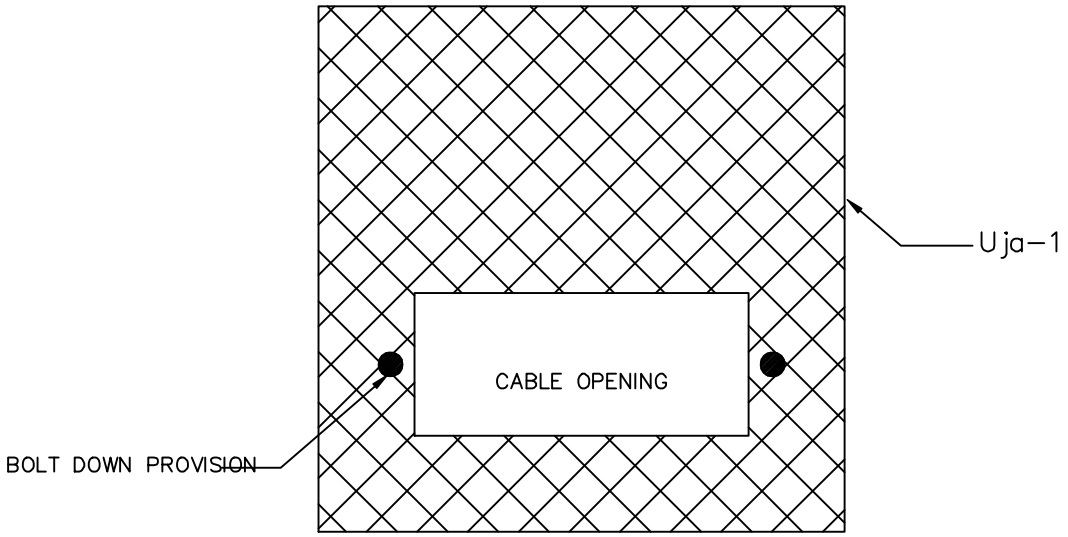


NOTES:

1. PAD ASSEMBLIES INCLUDE SITE PREPARATION, BEDDING AND DRAINAGE.
2. EQUIPMENT SHALL BE SECURED TO PAD IN ACCORDANCE WITH MANUFACTURERS INSTRUCTIONS.
3. CABLE OPENING AND PAD DIMENSIONS SHALL BE AS REQUIRED.

UNIT DESIGNATION:

| | |
|---|---|
| UM1-5C | CONCRETE |
| UM1-5NC | NON-CONCRETE |

| | | |
|---|---|---|
| PAD ASSEMBLIES | | |
| 2000 | UM1-5C<br>UM1-5NC | |

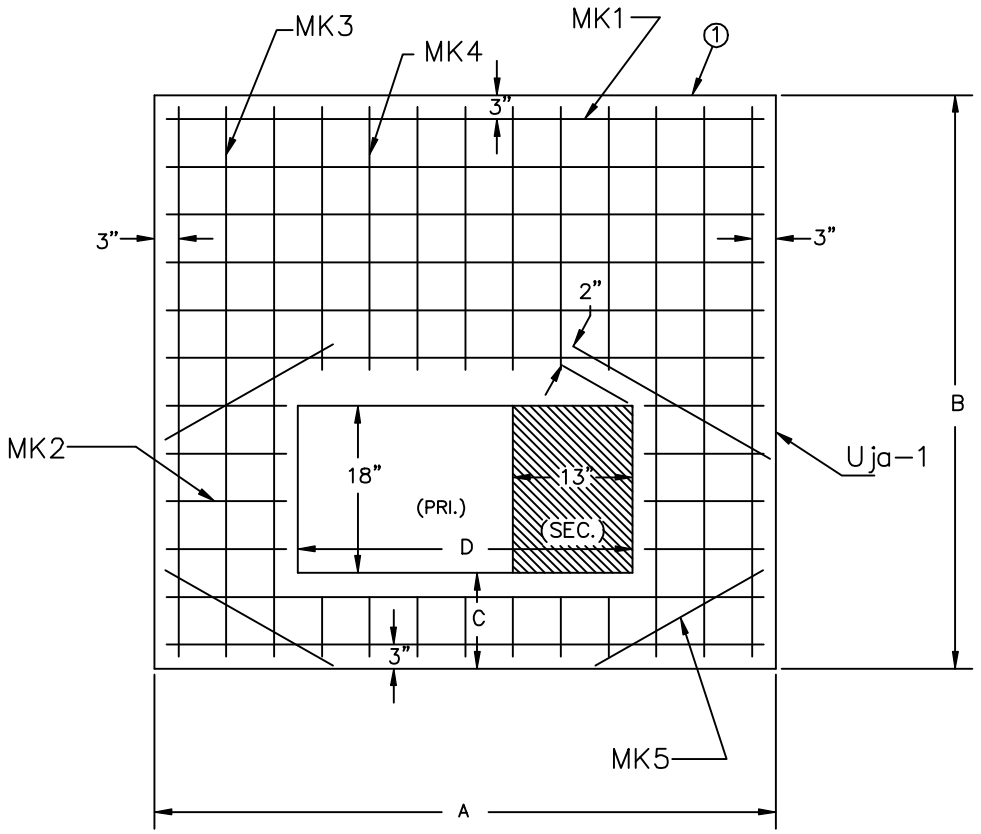


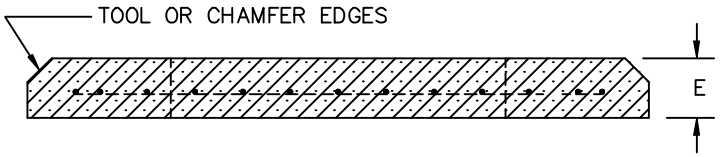


| PAD | 3-PHASE TRANSF. kVA | DIMENSIONS IN INCHES | | | | | REINFORCING BARS | | | | |
|---|---|---|---|---|---|---|---|---|---|---|---|
| | | A | B | C | D | E | MK1 | MK2 | MK3 | MK4 | MK5 |
| #1 | 75, 112 1/2, 150, 225, 300, 500 | 76 | 62 | 10 | 42 | 6 | 7 #4 70" | 4 #4 10" | 6 #4 57" | 6 #4 28" | 4 #4 26" |
| #2 | 750, 1000 1500, 2500 | 104 | 100 | 10 | 54 | 8 | 12 #4 98" | 6 #4 19" | 6 #4 94" | 7 #4 66" | 4 #4 29" |

NOTES:

1. CONCRETE TESTING, 3000 POUNDS MIN. PER SQUARE INCH; 4% TO 6% ENTRAINED AIR, 3/4" MAXIMUM SIZE AGGREGATE.
2. REINFORCING STEEL, ATSM-A615 GRADE 60, PLACE APPROX. 6" O.C. EACH WAY AND SECURELY TIED TOGETHER.
3. MINIMUM CONCRETE COVER OVER REINFORCING STEEL 2 INCHES UNLESS NOTED.
4. WOOD FLOAT FINISH, LEAVING NO DEPRESSIONS.

THREE PHASE TRANSFORMER CONCRETE PADS

2000 UM1-6C

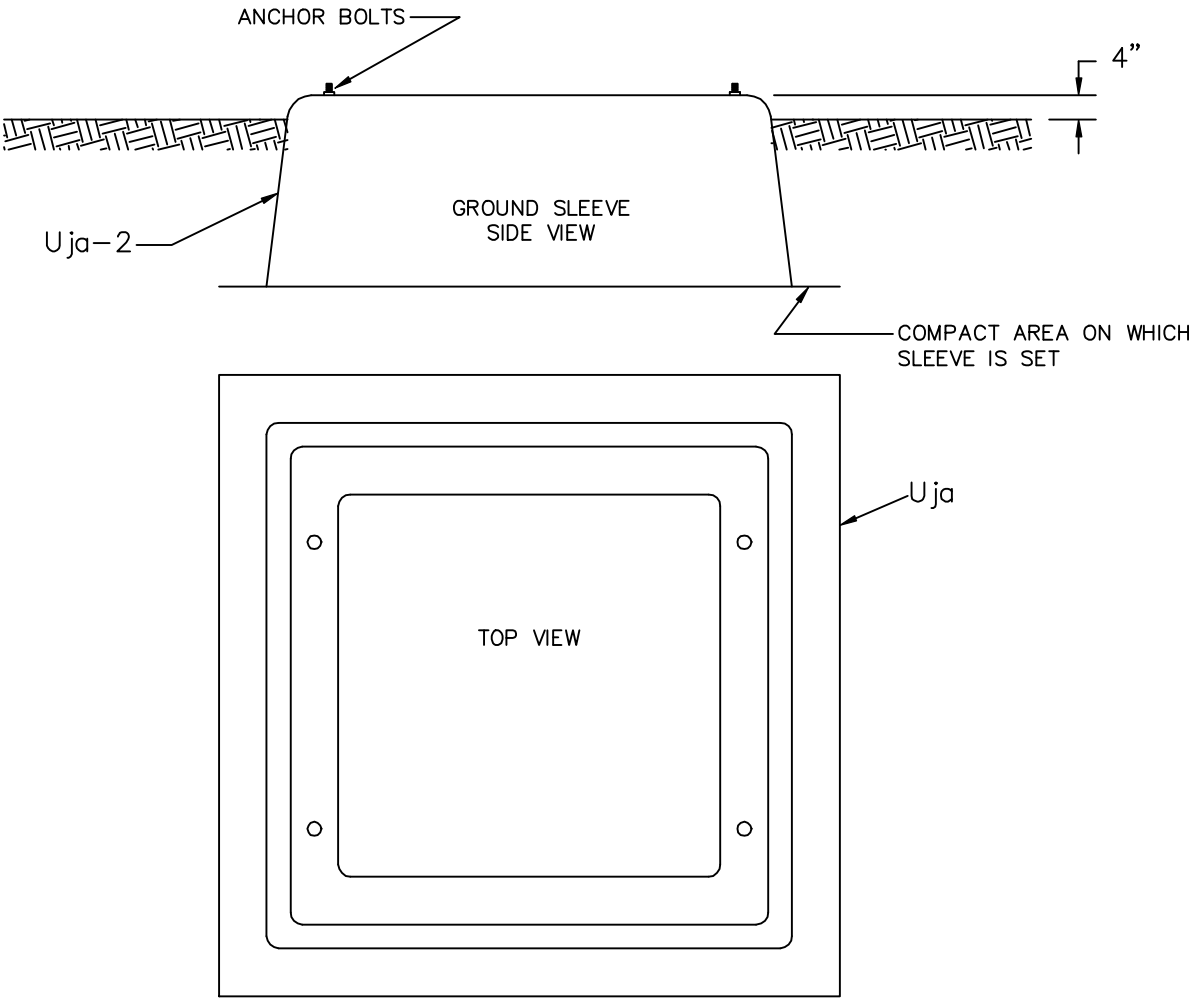


UNIT DESIGNATIONS:

UM1-7C CONCRETE

UM1-7NC NON-CONCRETE

| | | |
|---|---|---|
| | GROUND SLEEVE ASSEMBLY | |
| | 2000 | UM1-7C<br>UM1-7NC |

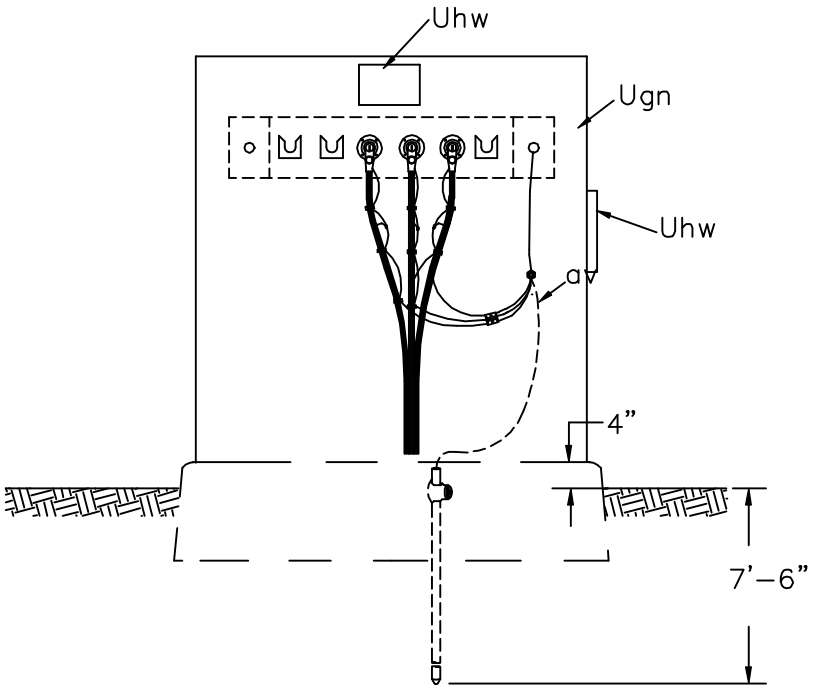


NOTE:

1. THE FOLLOWING UNITS/ASSEMBLIES ARE NOT PART OF THIS UNIT. SPECIFY SEPARATELY:

   A. MULTIPOINT TERMINATION AND OTHER ACCESSORIES
   B. FUSED OR NON-FUSED LOADBREAK ELBOWS
   C. GROUNDING ASSEMBLY UM48-1 OR OTHER
   D. PAD OR SLEEVE (IF REQUIRED)

2. INSTALL "WARNING" SIGN ON OUTSIDE SURFACE OF ENCLOSURE AND "DANGER" SIGN INSIDE ENCLOSURE.

3. PROVIDE SUFFICIENT PRIMARY NEUTRAL PIGTAIL AND CABLE SLACK TO PERMIT READY DISCONNECTION OF ELBOW AND MOUNTING ON PARKING STAND.

| ITEM | QTY. | MATERIAL |
|---|---|---|
| | | |
| | | |
| | | |
| p | | Connectors, as required |
| | | |
| av | | Jumpers, as required |
| | | |
| Ugn | 1 | Enclosure |
| Uhw | 2 | Signs, "DANGER" and "WARNING" |
| Ugc | | Cable riser shield, length as required |
| | | |

SINGLE PHASE
SECTIONALIZING ENCLOSURE

2000

UM3-14

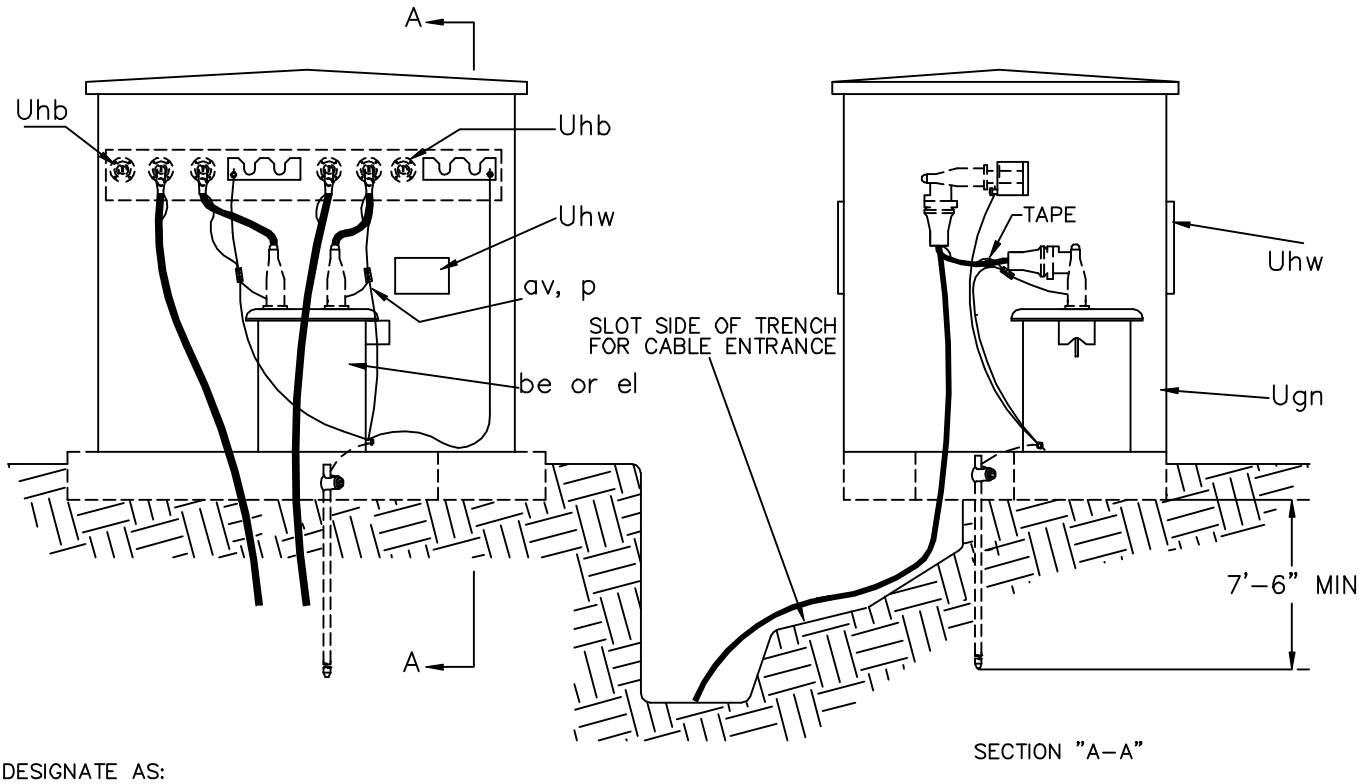


DESIGNATE AS:

RECLOSER ASSEMBLY UM3-44

SECTIONALIZER ASSEMBLY UM3-45

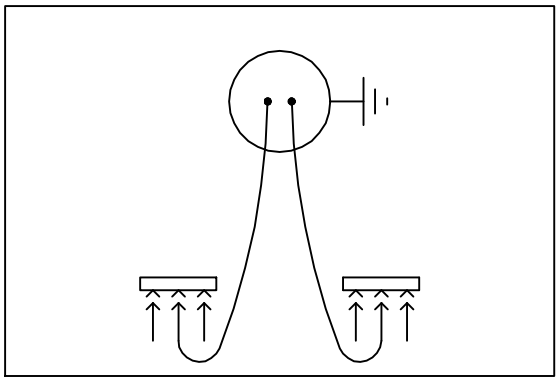

WIRING DIAGRAM

NOTES:

1. THE FOLLOWING UNITS/ASSEMBLIES ARE NOT PART OF THIS UNIT. SPECIFY SEPARATELY:

   A. MULTIPOINT TERMINATIONS AND OTHER ACCESSORIES
   B. LOADBREAK ELBOWS
   C. GROUNDING ASSEMBLY UM48-1 OR OTHER
   D. PAD ASSEMBLY

2. PROVIDE SUFFICIENT SLACK IN ALL CABLES TO PERMIT READY DISCONNECTION OF ELBOW AND MOUNTING ON PARKING STAND.

3. ANCHOR RECLOSER AND ENCLOSURE TO PAD.

4. INSTALL "WARNING" SIGN OUTSIDE SURFACE OF ENCLOSURE AND "DANGER" SIGN INSIDE ENCLOSURE.

| ITEM | QTY. | MATERIAL |
|---|---|---|
| p | | Connectors, as required |
| | | |
| av | | Jumpers, as required |
| be | 1 | Recloser, oil circuit with bushing wells |
| | | (UM3-44). |
| el | 1 | Sectionalizer, with bushing wells |
| | | (UM3-45). |
| Ugn | 1 | Enclosure |
| Uhb | 2 | Insulated covers |
| Uhw | 2 | Signs, "DANGER" and "WARNING" |
| | | |

SINGLE PHASE PAD MOUNTED SECTIONALIZER OR RECLOSER

2000

UM3-44
UM3-45

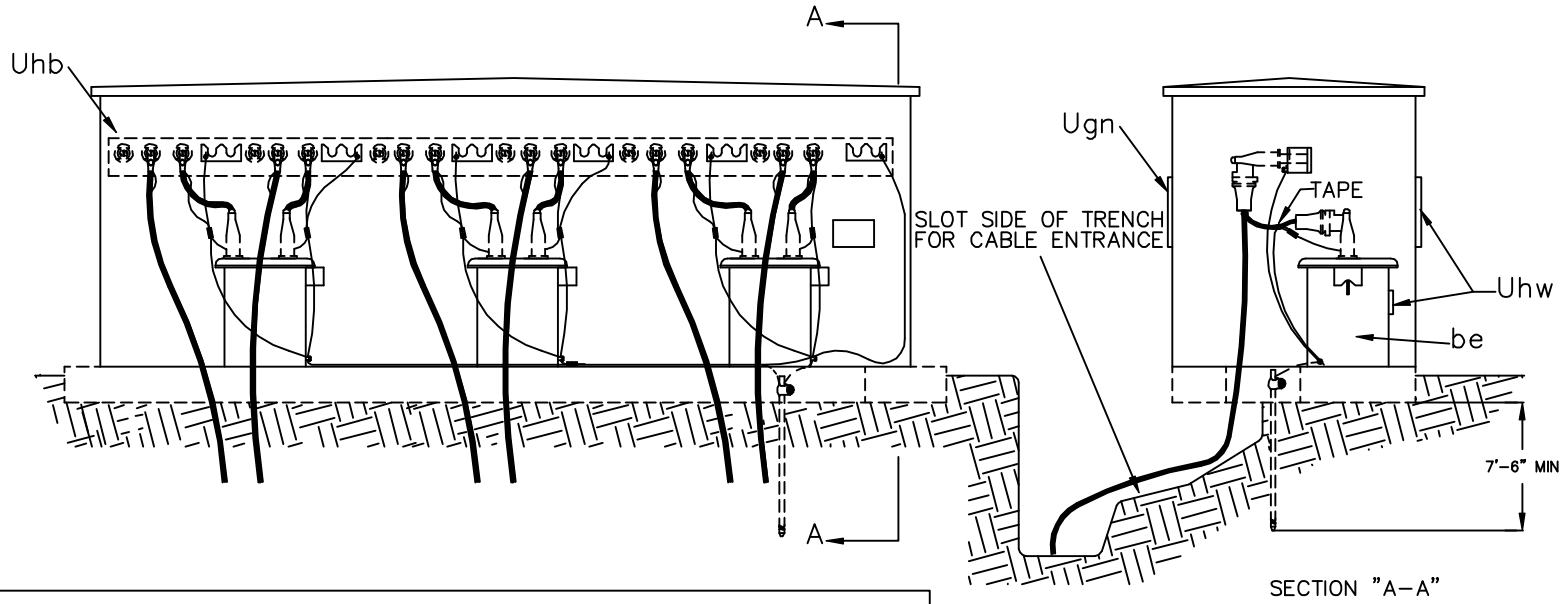


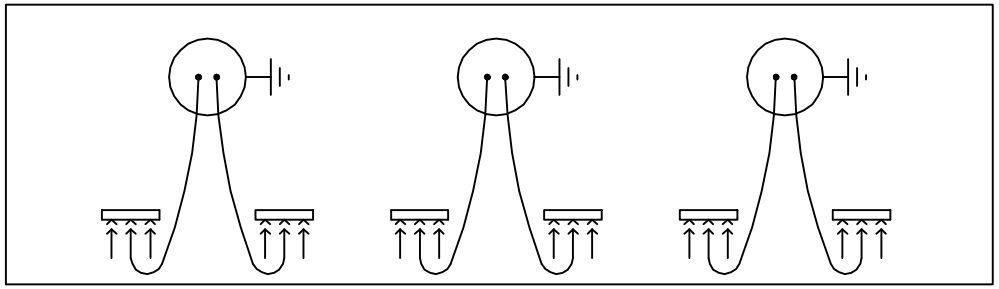

WIRING DIAGRAM

| ITEM | QTY. | MATERIAL |
|---|---|---|
| | | |
| be | 3 | Recloser, oil circuit with bushing wells |
| | | |
| Ugn | 1 | Enclosure |
| Uhb | 6 | Insulated covers |
| Uhw | 2 | Signs, "DANGER" and "WARNING" |
| | | |

NOTES:

1. THE FOLLOWING UNITS/ASSEMBLIES ARE NOT PART OF THIS UNIT. SPECIFY SEPARATELY:

   A. MULTIPOINT TERMINATIONS AND OTHER ACCESSORIES
   B. LOADBREAK ELBOWS
   C. GROUNDING ASSEMBLY UM48-1 OR OTHER
   D. PAD ASSEMBLY

2. PROVIDE SUFFICIENT SLACK IN ALL CABLES TO PERMIT READY DISCONNECTION OF ELBOW AND MOUNTING ON PARKING STAND.

3. ANCHOR RECLOSER AND ENCLOSURE TO PAD.

4. INSTALL "WARNING" SIGN OUTSIDE SURFACE OF ENCLOSURE AND "DANGER" SIGN INSIDE ENCLOSURE.

THREE, SINGLE PHASE
PAD MOUNTED RECLOSERS

2000 | UM3-46

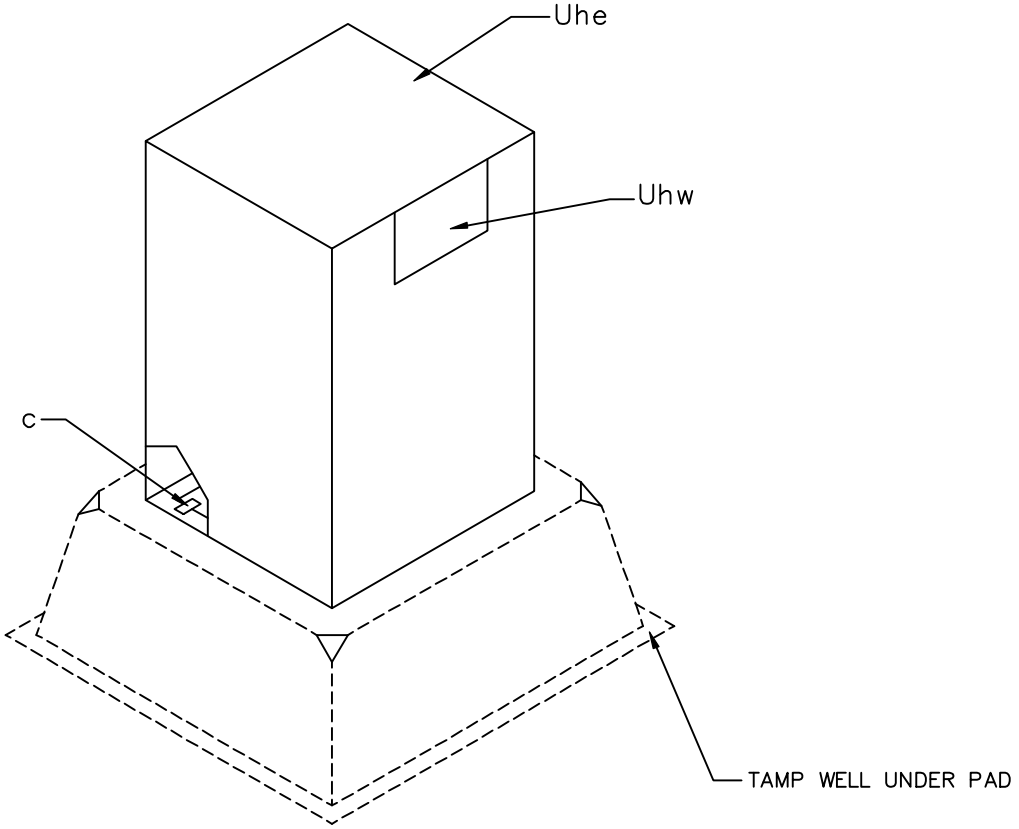


SPECIFICATION NUMBERING CODES:

UM3E–(1,2 or 3) – (FIG. NO.)

- (FIG. NO.) — SEE DRAWING UM3E–1, 2, OR 3
- (1,2 or 3) — NUMBER OF PHASES

EXAMPLE:

UM3E–3–9

- 9 — WIRING DIAGRAM
- 3 — THREE PHASE CONFIGURATION
- UM3E — FUSE ENCLOSURE

NOTES:

1. PAD OR GROUND SLEEVE LOAD BREAK ELBOWS, STRESS CONES, FUSES OR SWITCH BLADES ARE NOT PART OF THIS ASSEMBLY. THEY SHOULD BE SPECIFIED SEPARATELY ON THE STAKING SHEETS.
2. TAMP WELL UNDER SLEEVE. LEAVE SLACK COIL OF CABLE IN GROUND SLEEVE.
3. PLACE 6" OF FILL AGAINST INSIDE EDGE OF GROUND SLEEVE.
4. ON DEAD FRONT FUSE ENCLOSURES USE GROUNDING ASSEMBLY TO BE SPECIFIED SEPARATELY.
5. TOP OF GROUND SLEEVE TO BE INSTALLED 3" ABOVE GROUND LEVEL.
6. INSTALL "DANGER" SIGN ON EQUIPMENT INSIDE ENCLOSURE. INSTALL "WARNING" SIGN ON OUTSIDE SURFACE OF ENCLOSURE.
7. GROUND SLEEVES ARE SPECIFIED.

| ITEM | QTY. | MATERIAL |
|---|---|---|
| C | | Bolt, machine, as necessary |
| | | |
| Uhe | 1 | Enclosure as specified |
| Uhw | 2 | Signs, "DANGER" and "WARNING" |
| | | |

FUSE / SWITCH ENCLOSURE INSTALLATION

2000 | UM3E–__ –__

FIG. 1A

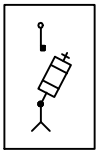

SINGLE PHASE
RADIAL FEED
1 – FUSE

FIG. 1B

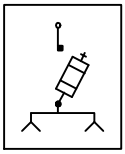

SINGLE PHASE
LOOP FEED
1 – FUSE

FIG. 1C

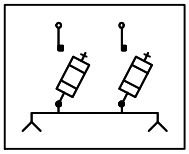

SINGLE PHASE
LOOP FEED
2 – FUSE

FIG. 1D

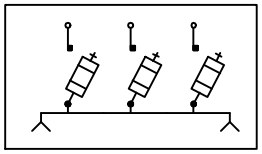

SINGLE PHASE
LOOP FEED
3 – FUSE

FIG. 1E

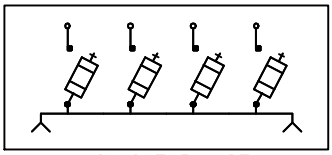

SINGLE PHASE
LOOP FEED
4 – FUSE

FIG. 1F

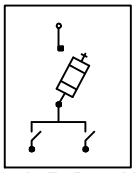

SINGLE PHASE
LOOP FEED
1 – FUSE

FIG. 1G

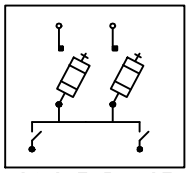

SINGLE PHASE
LOOP FEED
2 – FUSE

FIG. 2A

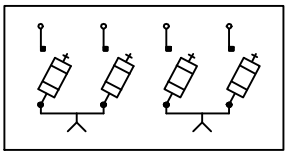

TWO PHASE
RADIAL FEED
2 – FUSE

FIG. 2B

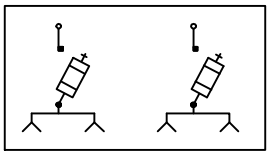

TWO PHASE
LOOP FEED
1 – FUSE

FIG. 2C

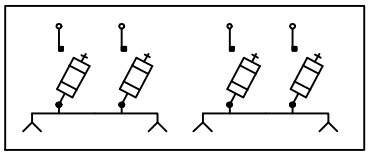

TWO PHASE
LOOP FEED
2 – FUSE

FIG. 2D

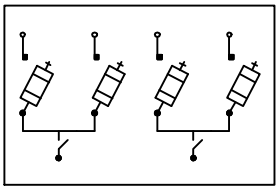

TWO PHASE
RADIAL FEED
2 – FUSE

FIG. 2E

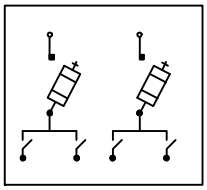

TWO PHASE
RADIAL FEED
1 – FUSE

FIG. 2F

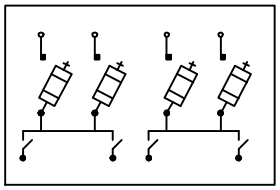

TWO PHASE
LOOP FEED
2 – FUSE

 — FUSE

• — TERMINATIONS CAN BE WITH ELBOWS, STRESS CONES OR TERMINATORS

^ — LOADBREAK ELBOW LINE SWITCHING

 — SINGLE POLE SOLID BLADE SWITCHING

| | | |
|---|---|---|
| | SINGLE POLE SWITCHING<br>200 AMP FUSE ENCLOSURE<br>INSTALLATION WIRING DIAGRAMS<br>( SINGLE PHASE AND TWO PHASE ) | |
| | 2000 | UM3E–1<br>UM3E–2 |

FIG. 3B

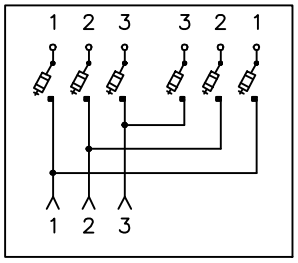


ELBOW SWITCH
2 – FUSE

FIG. 3C

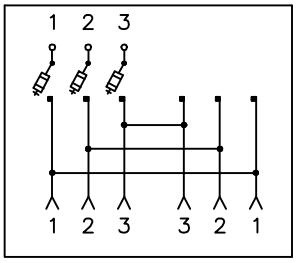


ELBOW SWTCH
1 – FUSE

FIG. 3D

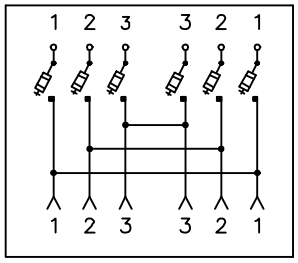


ELBOW SWITCH
2 – FUSE

FIG. 3E

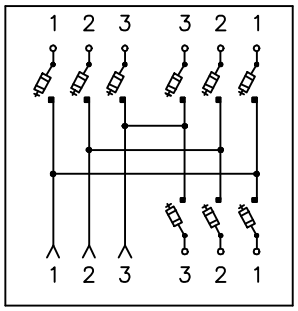


ELBOW SWITCH
3 – FUSE

FIG. 3F

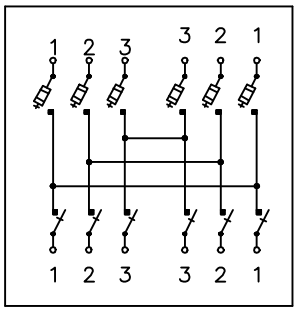


SINGLE POLE SWITCH
2 – FUSE

FIG. 3, 3A

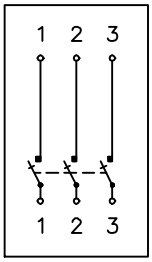


THREE PHASE
SWITCH

FIG. 4, 4A

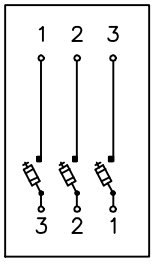


THREE PHASE
SINGLE POLE
SWITCH OR
FUSE

FIG. 5, 5A

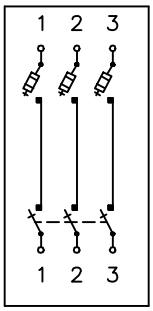


THREE PHASE
SWITCH
1 – FUSE

FIG. 6, 6A

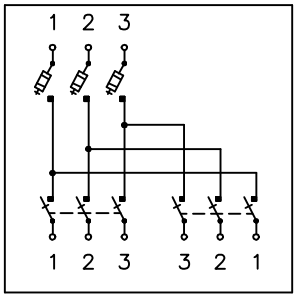


THREE PHASE
SWITCHES
1 – FUSE

FIG. 7, 7A

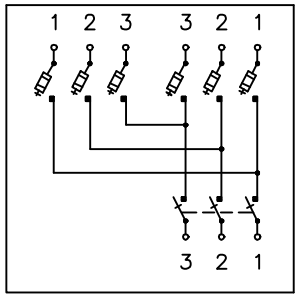


THREE PHASE
SWITCH
2 – FUSE

FIG. 8, 8A

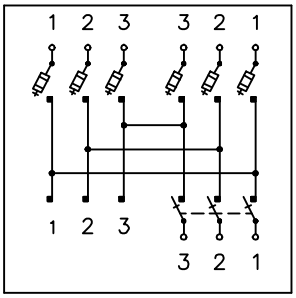


THREE PHASE SWITCH
2 – FUSE
1 – TERMINAL

FIG. 9, 9A

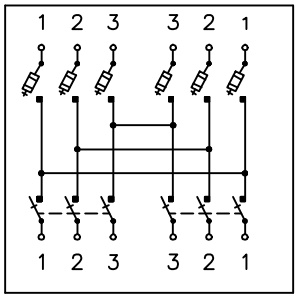


THREE PHASE SWITCHES
2 – FUSES

FIG. 10, 10A

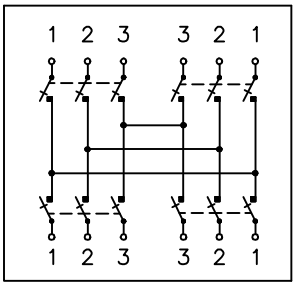


THREE PHASE SWITCHES

FIG. 11, 11A

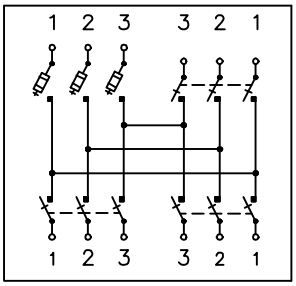


THREE PHASE SWITCHES
1 – FUSE

FIG. 12, 12A

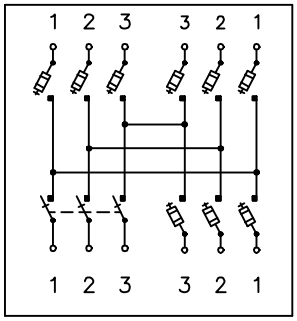


THREE SWITCH
3 – FUSES

FIG. 13, 13A

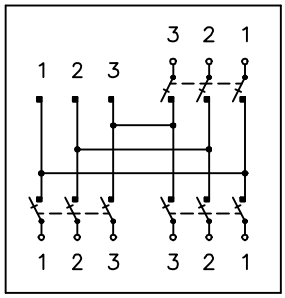


THREE PHASE SWITCHES
1 – TERMINAL

FIG. 14, 14A

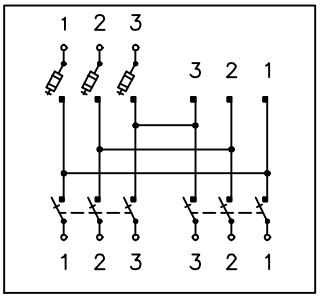


THREE PHASE SWITCHES
1 – FUSE
1 – TERMINAL

FIG. 19, 19A

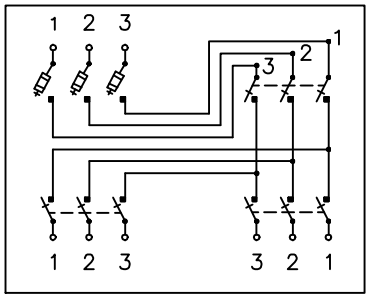


THREE PHASE SWITCHES
THREE PHASE SWITCHED / FUSE TAP

EXAMPLE:

FIG. 3 = 600 AMP MAIN LINE SWITCH

FIG. 3A = 200 AMP MAIN LINE SWITCH

-⊡- – FUSE

• – TERMINATIONS CAN BE WITH ELBOWS, STRESS CONES OR TERMINATORS

⋀ – LOADBREAK ELBOW LINE SWITCHING

| | | |
|---|---|---|
| FUSE ENCLOSURE (200 – 600 AMP)<br>WIRING DIAGRAMS<br>( THREE PHASE ) | | |
| | 2000 | UM3E–3 |

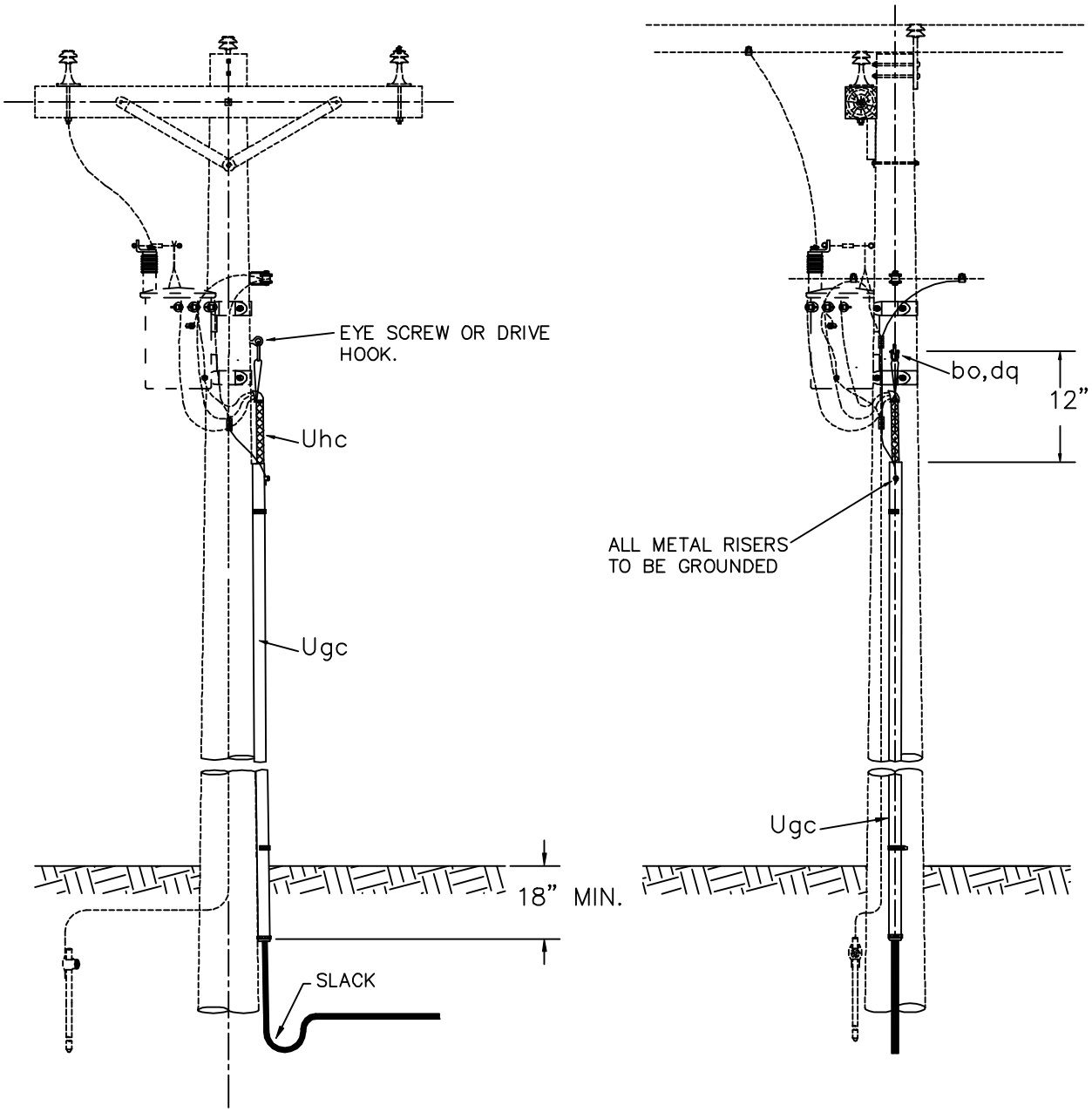


NOTES:

1. ALLOW MINIMUM CABLE SLACK OF 24" AT BOTTOM OF RISER.

| ITEM | QTY. | MATERIAL |
|---|---|---|
| bo | | Anchor, shackle. Do not use if drive |
| | | hook is used. |
| dq | 1 | Eye screw, elliptical or drive hook. |
| | | |
| Ugc | 1 | Cable riser shield. Length as required. |
| Uhc | 1 | Cable support. |
| | | |

SECONDARY CABLE TERMINAL POLE

2000 UM5

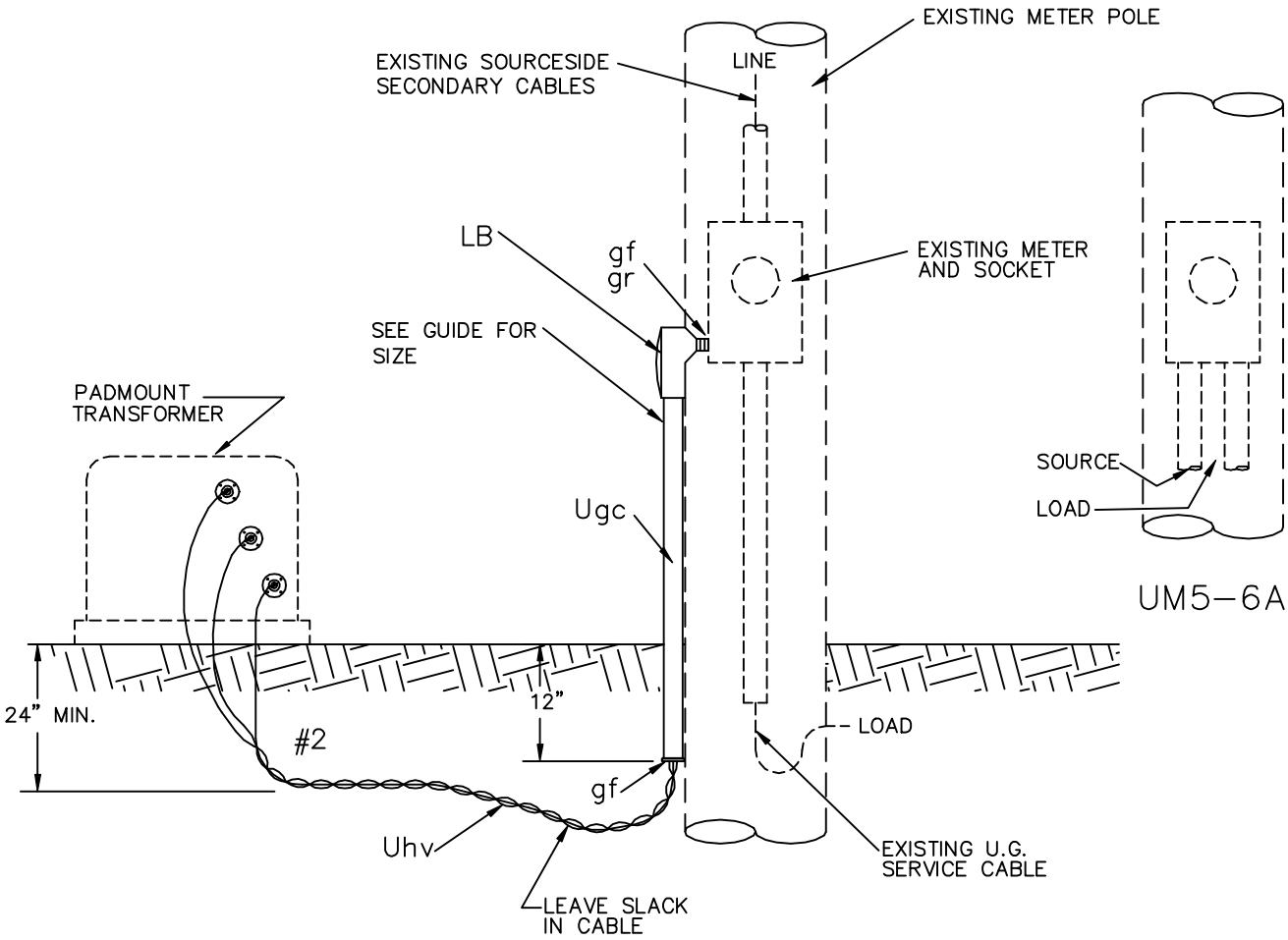


NOTES:

1. DISCONNECT SOURCESIDE CONDUCTORS IN METER SOCKET.
2. CONNECT NEW CABLE TO SOURCESIDE OF METER SOCKET.
3. SECONDARY CABLE, UNIT Uhv, SPECIFIED ON SEPARATE UNIT.
4. IF UNIT UM5–6A IS SPECIFIED, EXISTING METER SOCKET AND TYPE "LB" CONDUIT FITTING ARE REPLACED BY A METER SOCKET WITH TWO CONDUIT KNOCKOUTS ON BOTTOM SIDE.

| ITEM | QTY. | MATERIAL |
|---|---|---|
| gf | 2 | Bushings, insulated |
| gr | 2 | Locknut |
| | 1 | Type "LB" conduit fitting |
| | 1 | conduit short nipple, with bushing |
| | | |
| Ugc | | Conduit, as required |
| Uhv | | Cable, underground, 600 V, as required |

SECONDARY CABLE TERMINAL TO METER BASE

2000

UM5–6
UM5–6A

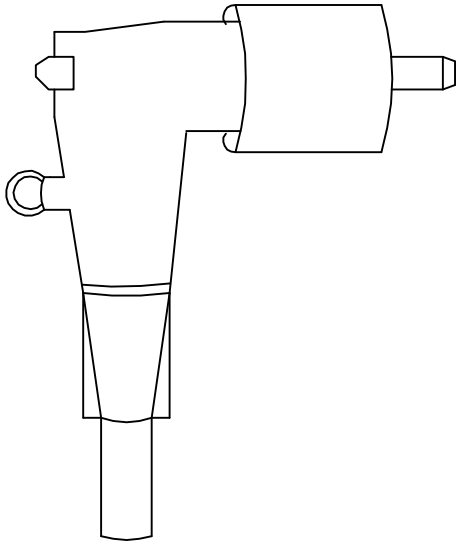

UM6–1 Uhp
LOAD BREAK ELBOW
(200 A)

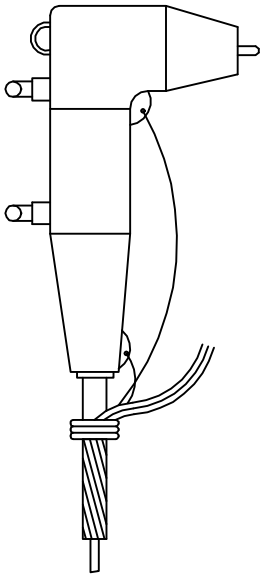

UM6–2 Uhp
FUSED ELBOW TERMINATION
(200 A)

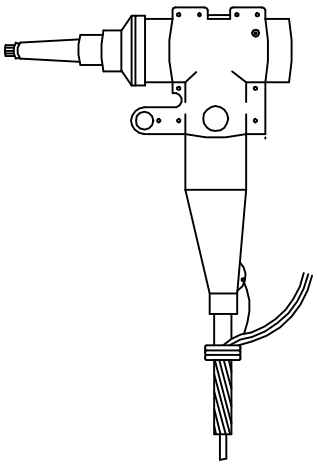

UM6–3 Uhb
DEAD BREAK TERMINATION
(600 A)

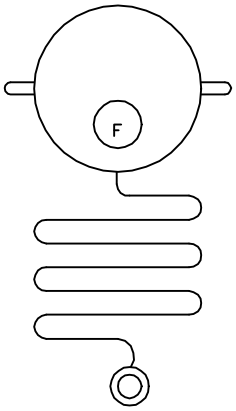


UM6–4 Ugo
FAULT INDICATOR

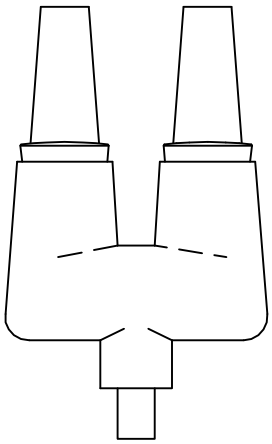

UM6–5 Uhb
FEED THROUGH LOAD BREAK INSERT

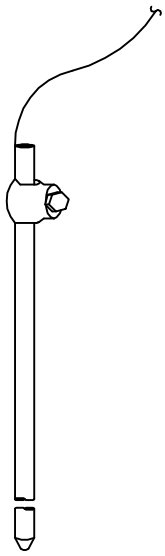

UM6–6 ai, aj, cj
GROUND ROD ASSEMBLY

| | | |
|---|---|---|
| | MISCELLANEOUS ACCESSORIES | |
| 2000 | Page 1 of 8 | UM6–__ |

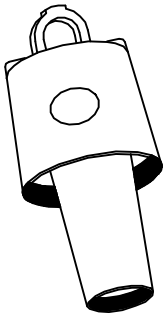

UM6–7 Uhb
BUSHING WELL PLUG
(200 A)

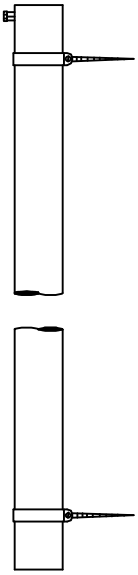

UM6–8 Ugc
RISER SHIELD (U GUARD)

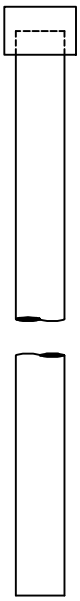

UM6–9 Ugc
CONDUIT CABLE RISER

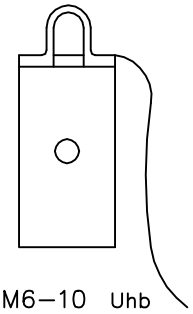

UM6–10 Uhb
INSULATED PROTECTIVE CAP
(200 A)

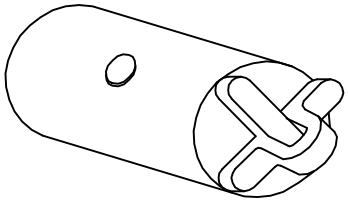

UM6–11 Uhb
INSULATED PROTECTIVE CAP
(600 A)

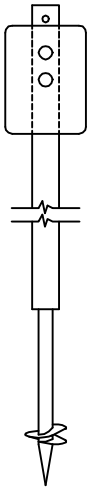

UM6–12 Uhx
CABLE MARKER ASSEMBLY

| | | |
|---|---|---|
| | MISCELLANEOUS ACCESSORIES | |
| 2000 | Page 2 of 8 | UM6–__ |

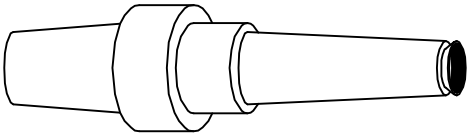

UM6–13 Uhb
LOAD BREAK INSERT
(200 A)

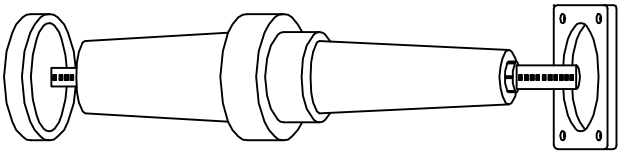

UM6–14 Uhb
DEADBREAK INSERT
(600 A)

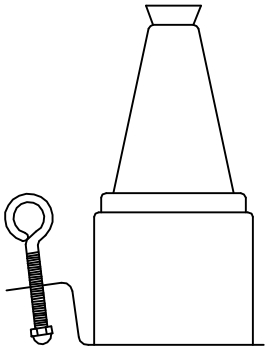

UM6–15 Uhq
STAND–OFF INSULATOR
(200 A)

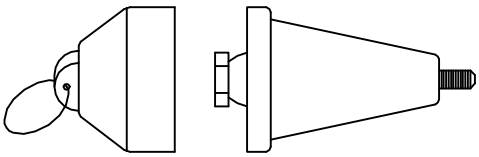

UM6–17 Uhb
INSULATING PLUG
600 AMP CONNECTOR

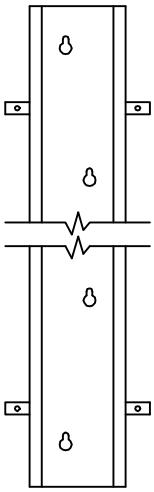

UM6–18
BACKING PLATE FOR
U–GUARD RISER SHIELD

| | | |
|---|---|---|
| | MISCELLANEOUS ACCESSORIES | |
| 2000 | Page 3 of 8 | UM6–__ |

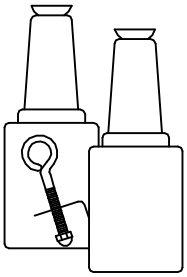

UM6–19 Uhq
STAND–OFF INSULATOR
FEED THROUGH
(200 A)

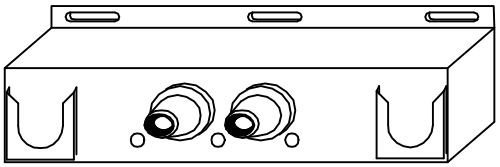

UM6–20 Uhq
TWO POINT JUNCTION
(200 A)

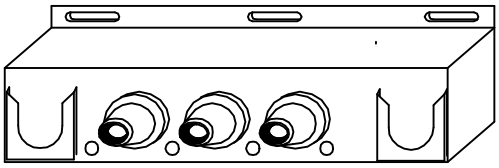

UM6–21 Uhq
THREE POINT JUNCTION
(200 A)

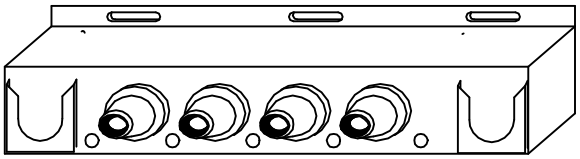

UM6–22 Uhq
FOUR POINT JUNCTION
(200 A)

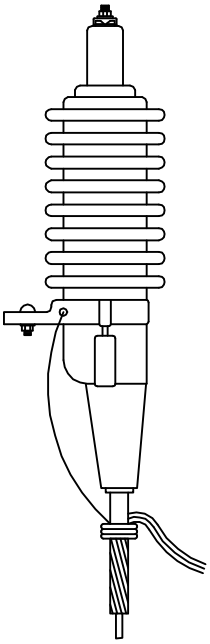

UM6–24 Ugk
OUTDOOR TERMINATION

| | | |
|---|---|---|
| | MISCELLANEOUS ACCESSORIES | |
| 2000 | Page 4 of 8 | UM6–__ |

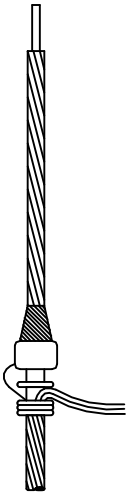

UM6–26 Ugk
INDOOR STRESS RELIEF CONE

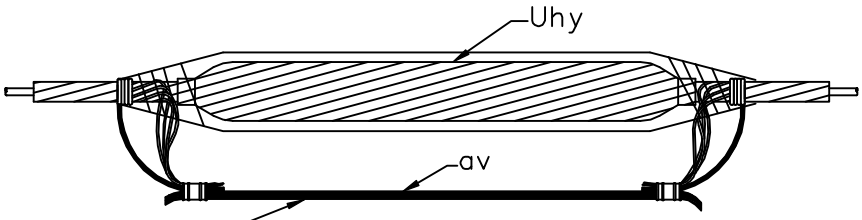


CONCENTRIC NEUTRAL
OR
EQUIVALENT EXTENSION

UM6–28 Uhy
IN LINE PRIMARY SPLICE
( FOR JACKETED CABLE )

NOTES:

1. Jacketed cable restoration and termination sealing kits (items Uhf) are available for resealing concentric neutral wires after installation of splices, elbows, and outdoor terminations; also for connecting a grounding lead wire to the concentric neutral wires and resealing the jacket.

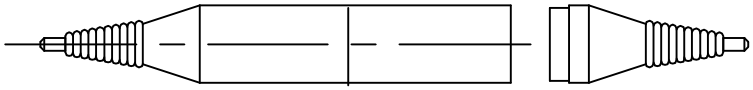

UM6–32 Ugq
BOOT OR SLEEVE – INSULATED
(600 VOLT)

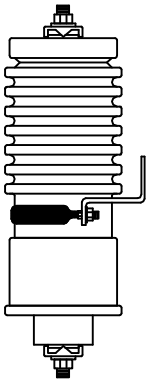

UM6–33 Uae
SURGE ARRESTER

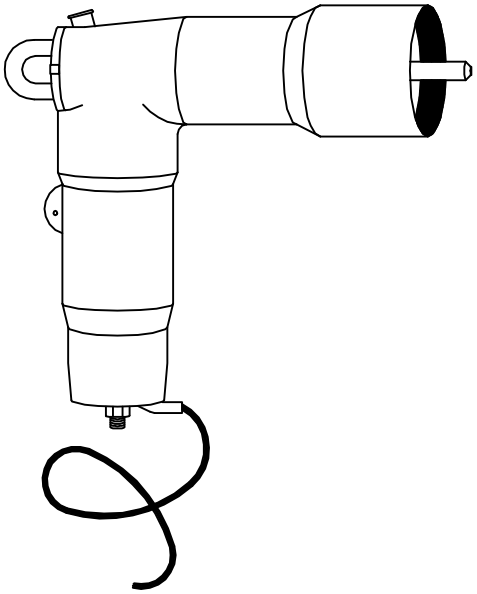

UM6–34 Uae
DEAD BREAK ELBOW
SURGE ARRESTER

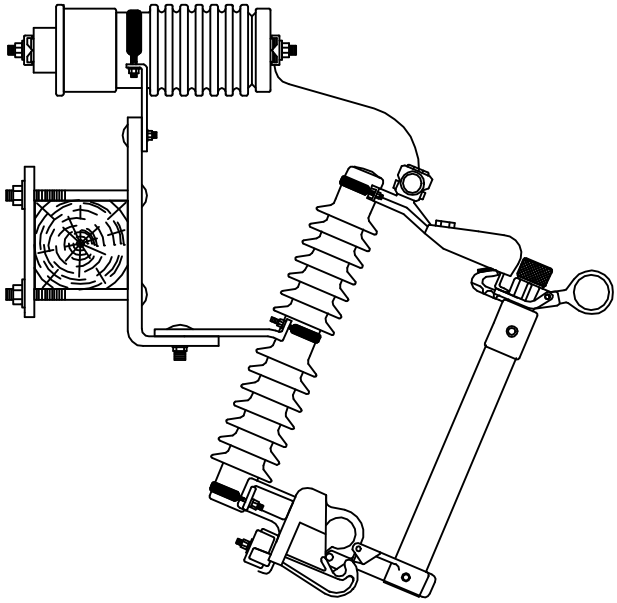

UM6–35 Uax
CUTOUT–ARRESTER COMBINATION

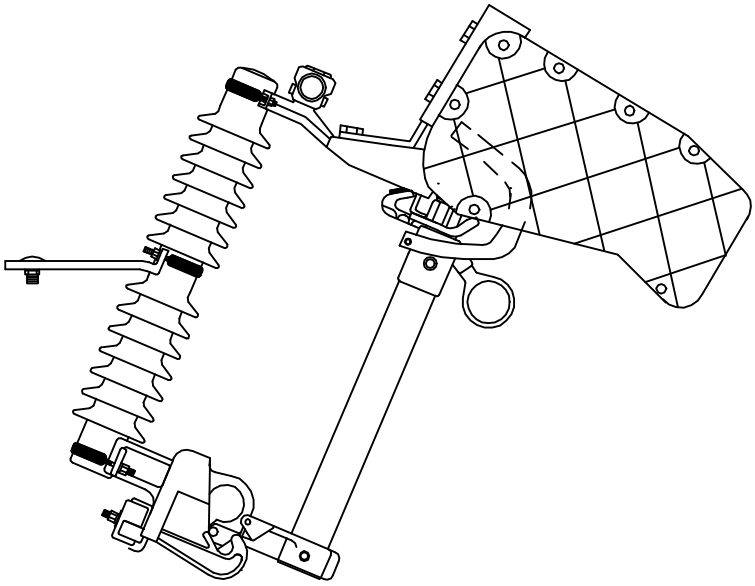

UM6–36 af
LOAD BREAK CUTOUT

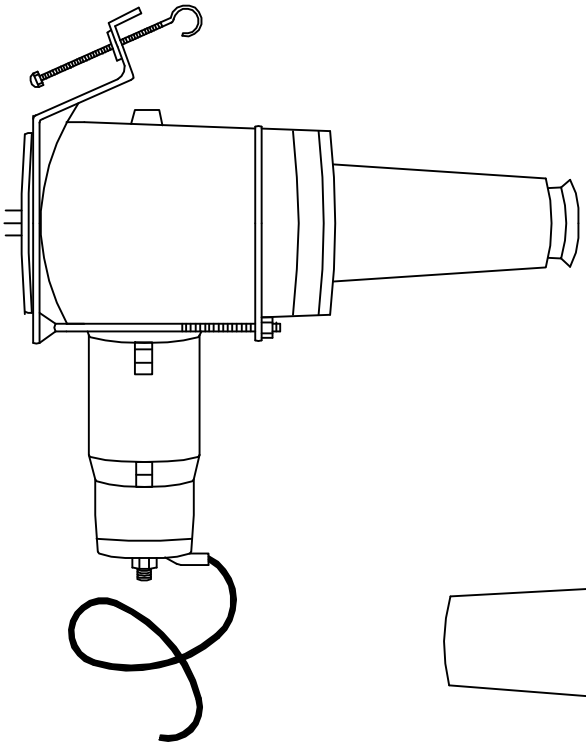

UM6–37 Uae
PARKING STAND ARRESTER

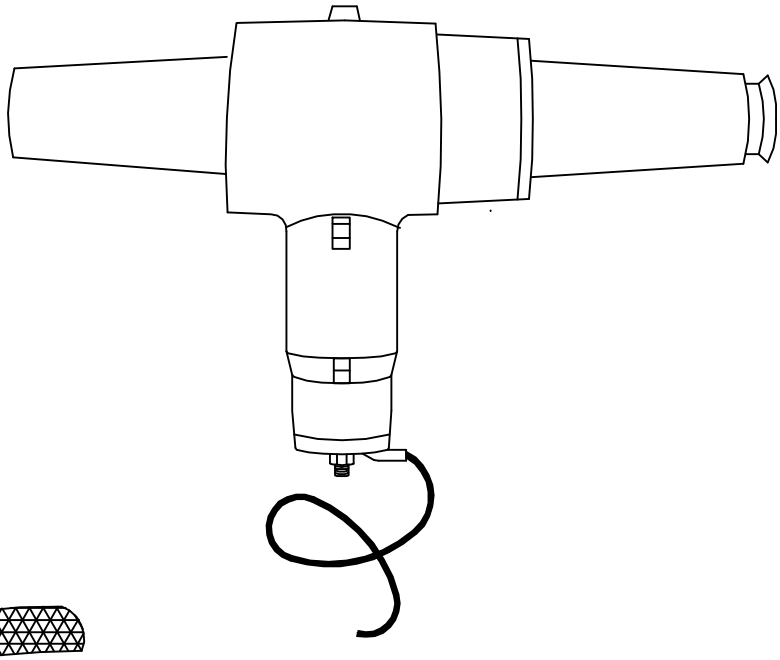

UM6–38 Uae
BUSHING ARRESTERS

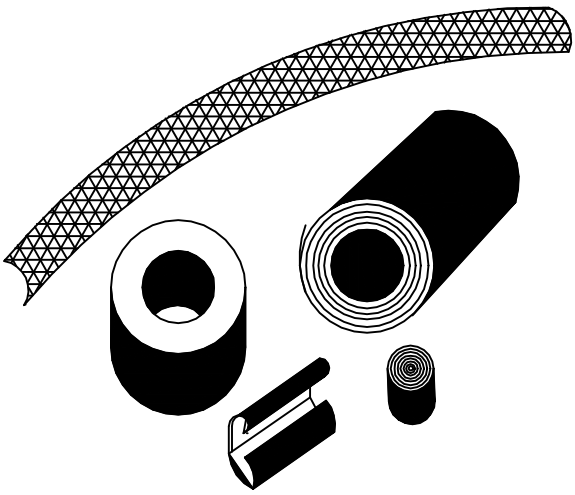

UM6–39 Uhf
JACKETED CABLE GROUNDING KITS

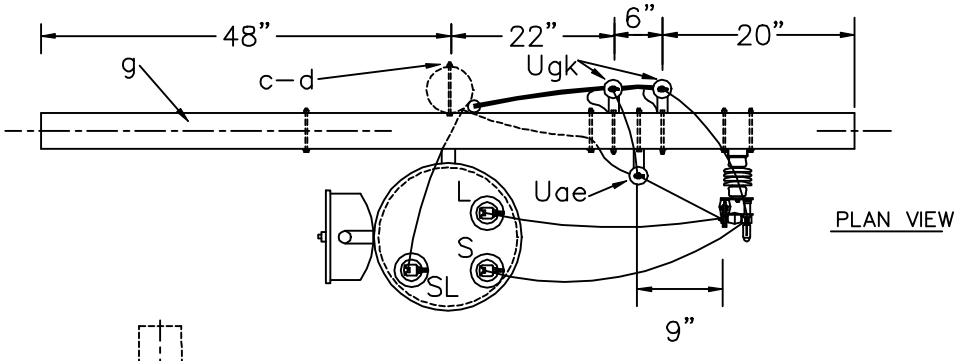


PLAN VIEW

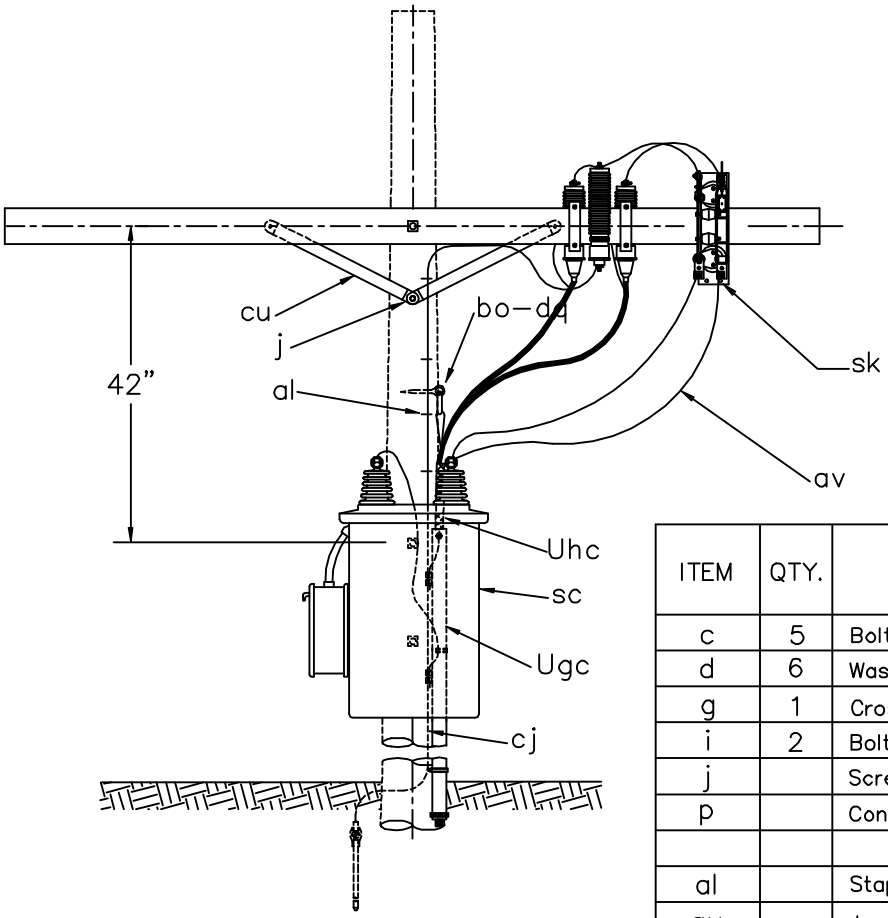


NOTES:

1. Three of these assemblies may be used for three phase installation.
2. Total arrester lead length must be under 3 feet if possible.
3. All clearances must meet NESC requirements.

| ITEM | QTY. | MATERIAL |
|---|---|---|
| c | 5 | Bolt, machine, 5/8" x required length. |
| d | 6 | Washer, square 2 1/4". |
| g | 1 | Crossarm, 3 5/8" x 4 5/8" x 8'–0". |
| i | 2 | Bolt, carriage, 3/8" x 4 1/2" |
| j | | Screw, lag 1/2" x 4" as required. |
| p | | Connectors, as required. |
| | | |
| al | | Staples, as required. |
| av | | Jumpers, as required. |
| bo | 1 | Anchor, shackle. Omit if drive hook is used. |
| cj | | Ground wire, as required. |
| cu | 2 | Brace, wood, 28" |
| dq | 1 | Eye screw, elliptical or drive hook. |
| ek | | Locknuts |
| fn | 1 | Bracket, cutout, extension. |
| sc | 1 | Regulator, step type. |
| sk | 1 | Regulator, by–pass switch. |
| | | |
| Uae | 1* | Surge arrester |
| Ugc | 1 | Cable riser shield. Length as required. |
| Ugk | 2 | Cable termination. |
| Uhc | 2 | Cable support. |
| Uhd | 2 | Crossarm mounting bracket. |
| | | |

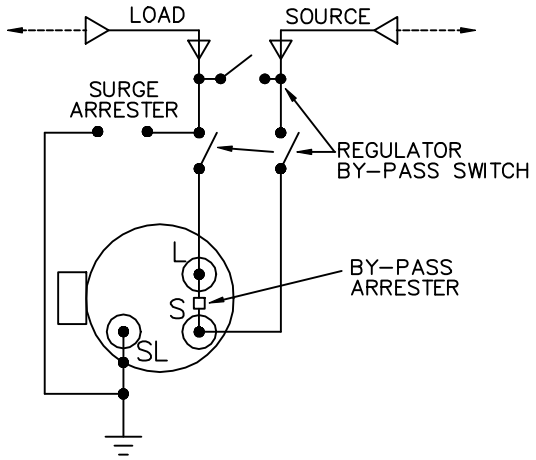


WIRING DIAGRAM

SINGLE PHASE REGULATOR ASSEMBLY WITH BY–PASS SWITCHING FUNCTION UNDERGROUND TO UNDERGROUND

2000

UM7–1

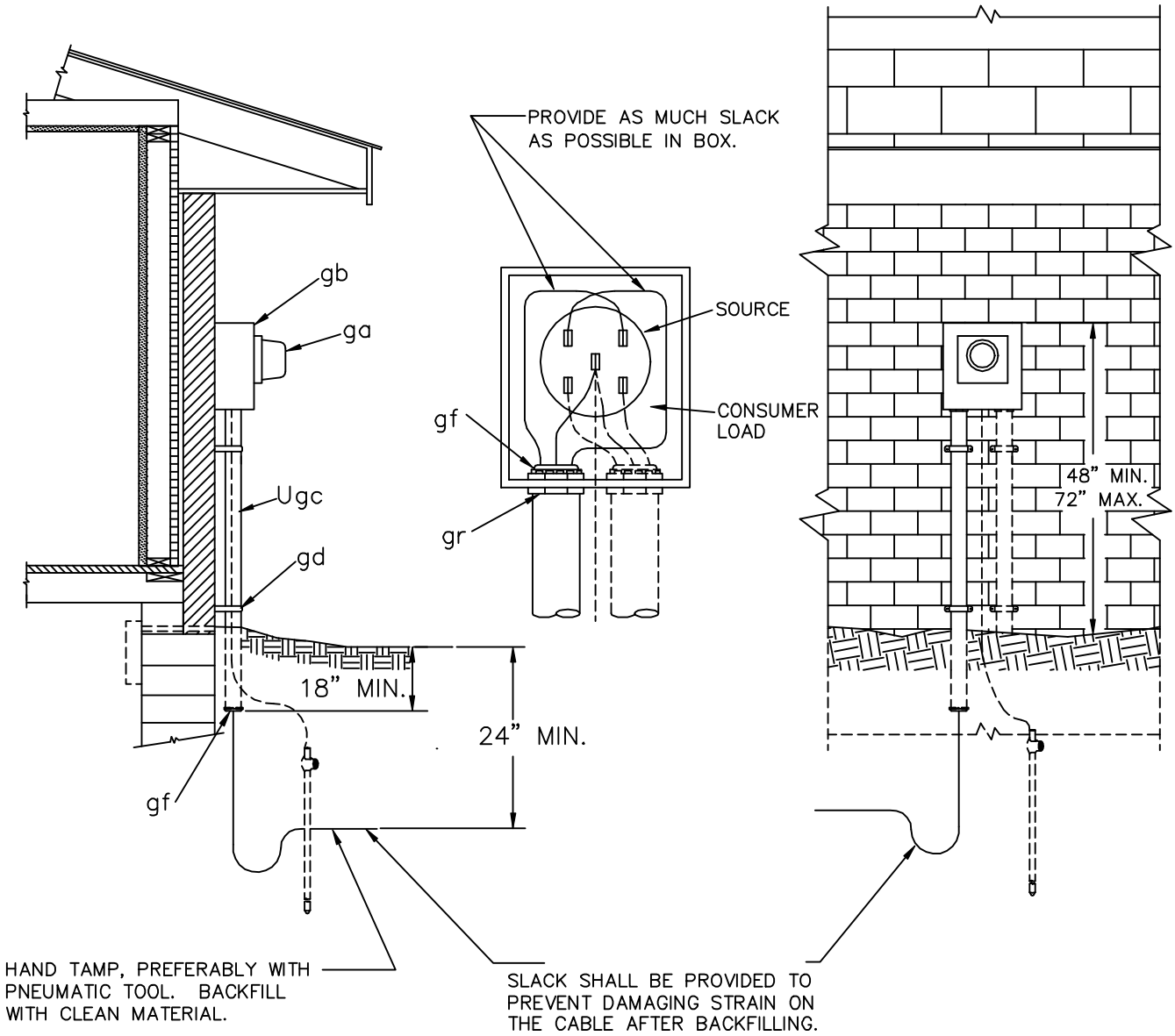


| ITEM | QTY. | MATERIAL |
|---|---|---|
| ga | 1 | Meter, as required |
| gb | 1 | Meter socket |
| gd | 2 | Pipe strap |
| gf | 2 | Insulated bushing, size as required |
| gr | 2 | Conduit locknuts, size as required |
| | | |
| Ugc | 1 | Conduit, diameter and length as required |

METER INSTALLATION
UNDERGROUND SOURCE

2000 | UM8

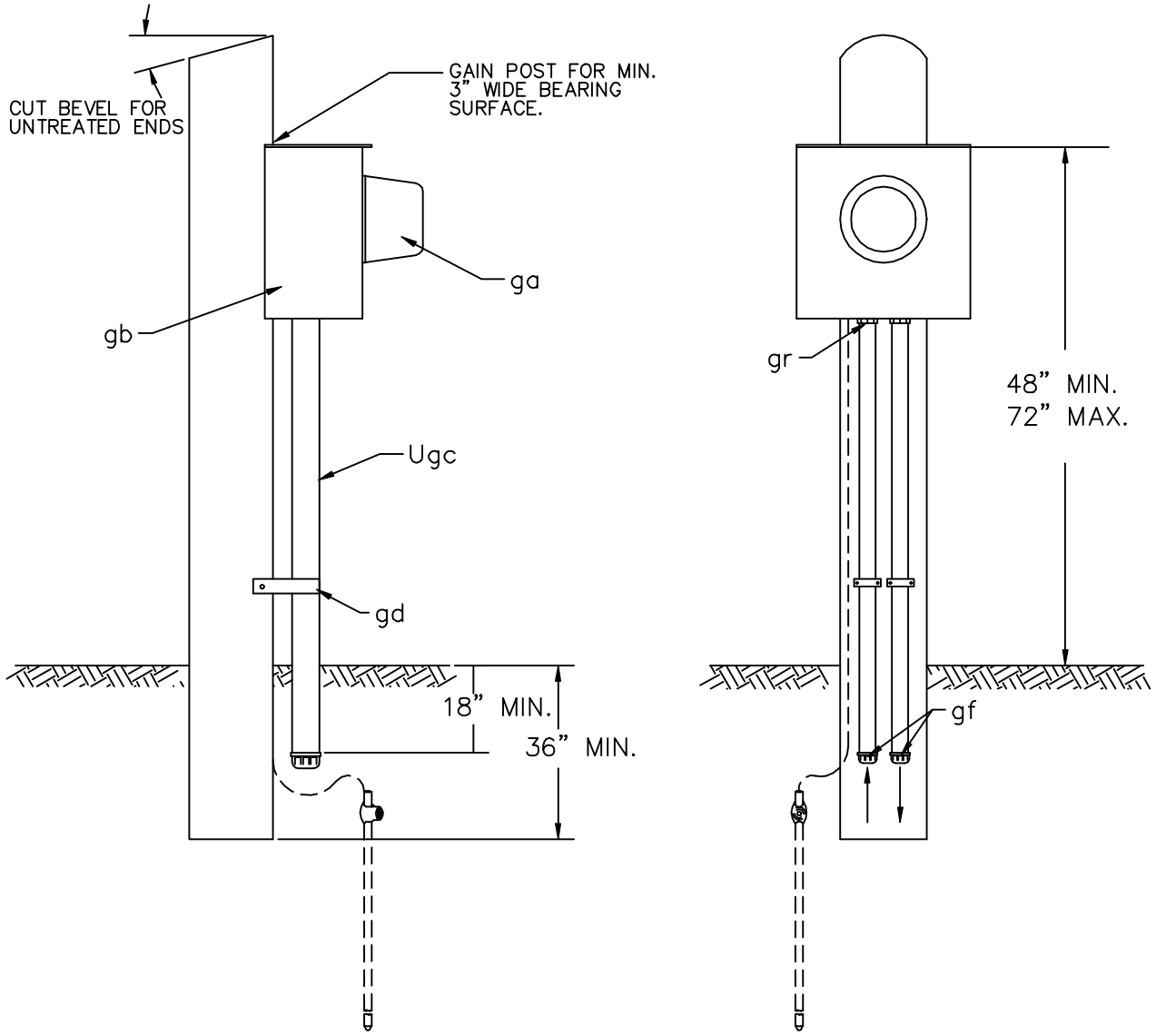


NOTE: MINIMUM POST SIZE SHALL BE FOUR INCHES SQUARE OR IN DIAMETER.

| ITEM | QTY. | MATERIAL |
|---|---|---|
| | 1 | Wood post, approx. 9 ft. long, treated |
| ga | 1 | Meter, as required |
| gb | 1 | Meter socket |
| gd | 1 | Pipe strap |
| gf | 2 | Insulated bushings, size as required |
| gr | 2 | Conduit locknuts, size as required |
| | | |
| Ugc | 2 | Conduit, diameter and length as required |

METER PEDESTAL
WOOD POST

2000

UM8-2

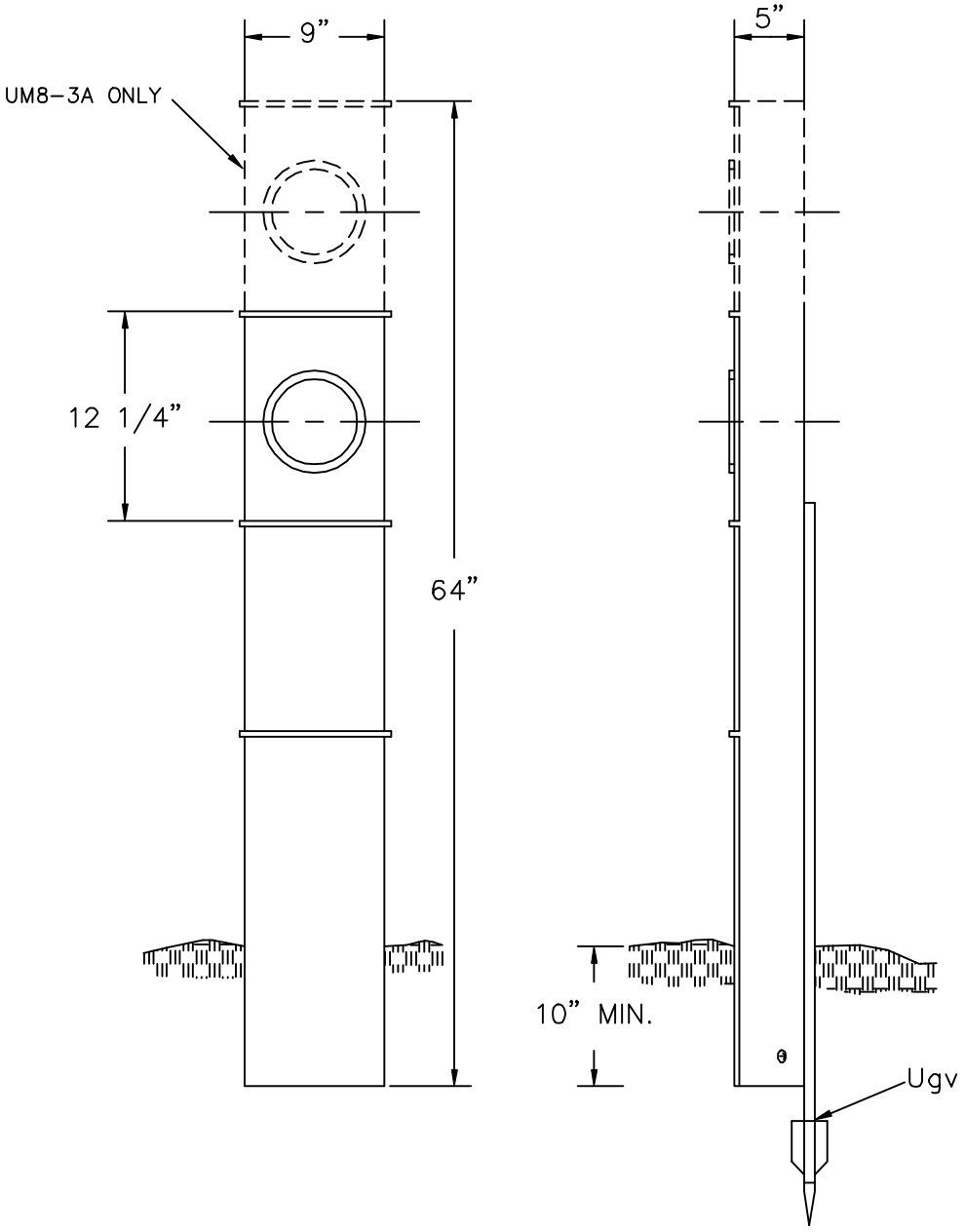


| ITEM | QTY. | MATERIAL |
|---|---|---|
| | 1 | Meter, pedestal, 200 A Main, |
| | | 200 Amp. per position (UM8–3) |
| | 1 | Meter, pedestal, 400 A Main, |
| | | 200 Amp. per position (UM8–3A) |
| | | |
| Ugv | 1 | Stake, support |

TROUGH TYPE
METER PEDESTAL

2000

UM8–3
UM8–3A

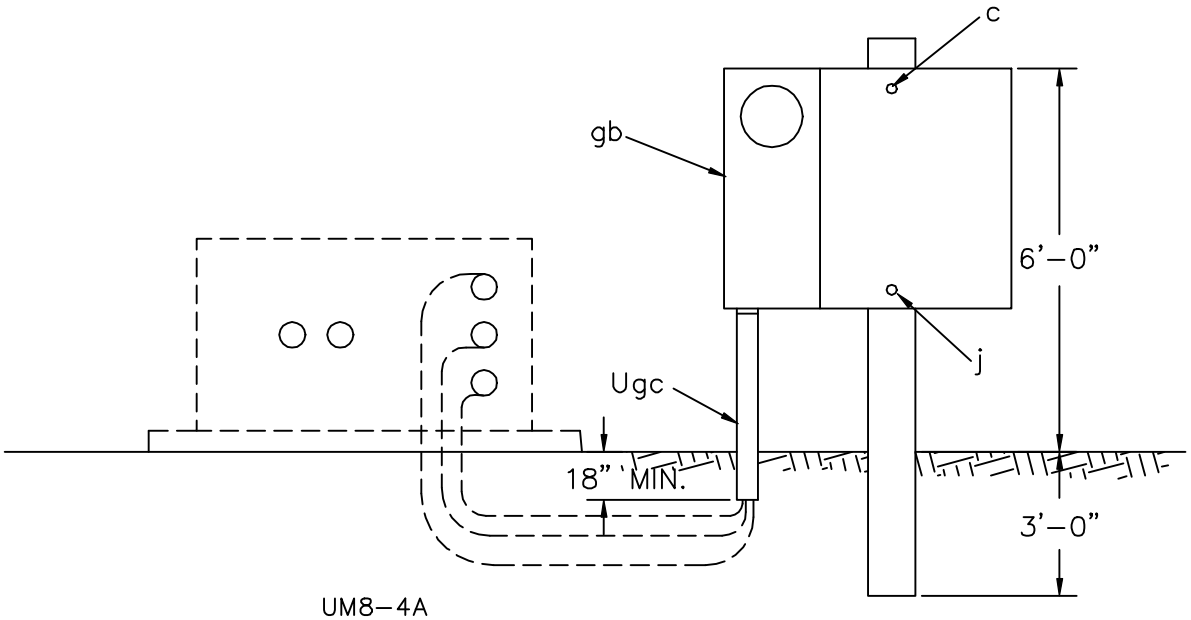


UM8–4A

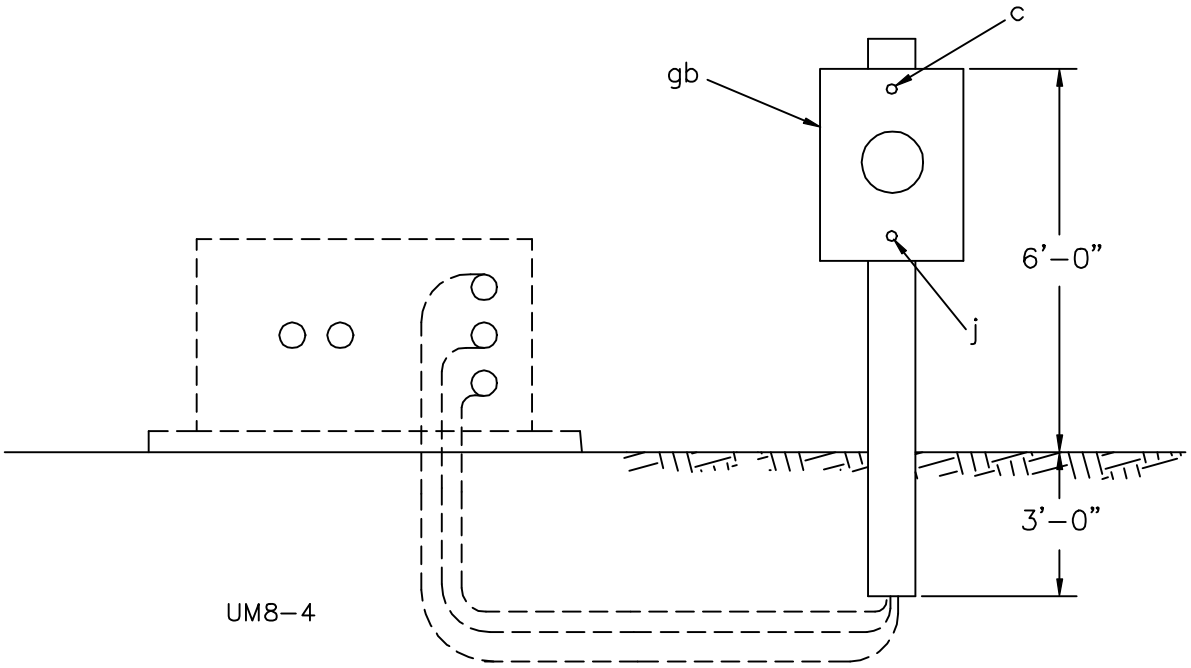


UM8–4

| ITEM | QTY. | MATERIAL |
|---|---|---|
| | | Stub pole, 9'–0" |
| | | Switch, as required |
| | | |
| c | 1 | Machine bolt, 1/2" x 10" |
| d | 1 | Washer, square, 2" x 2" |
| j | 1 | Lag screw, 1/2" x 4" |
| | | |
| ek | 1 | Locknut, 1/2" |
| gb | | Meter base, as required |
| | | |
| Ugc | | Conduit, as required |

METER & SWITCH INSTALLATION
UNDERGROUND SOURCE

2000

UM8–4
UM8–4A

TOP VIEW

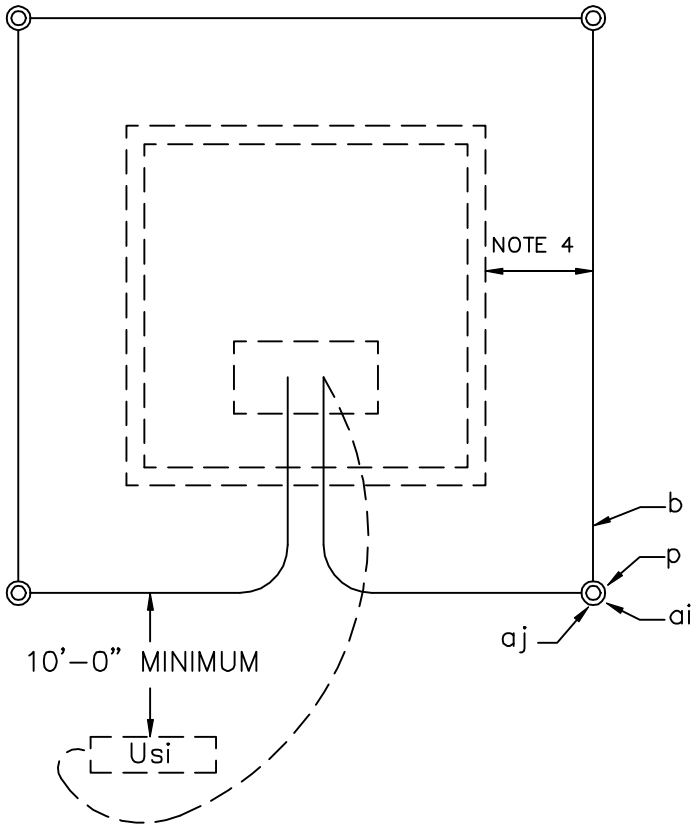


NOTE:

CONNECT ANODE, LEAD INSIDE PAD MOUNTED ENCLOSURES FOR TESTING PURPOSES.

FRONT VIEW

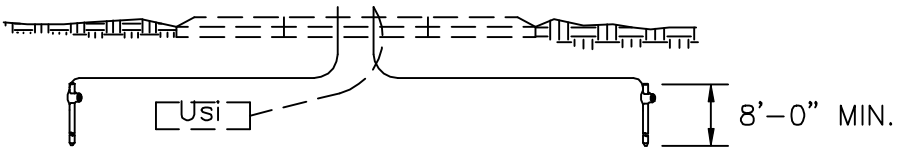


NOTES:

1. PLACE ONE GROUND ROD AT EACH CORNER.
2. GROUNDING GRID 1/0 BARE COPPER BURIED 6" BELOW GROUND, RUN WIRE INTO BASEMENT AND ALLOW 5'–0" FOR GROUNDING LIVE FRONT SWITCH / FUSE ENCLOSURES.
3. PAD OR BASEMENT IS NOT PART OF THIS UNIT.
4. PLACE GROUND WIRE A MINIMUM OF 24" AWAY FROM THE SIDE OR SIDES OF PAD THAT A PERSON WOULD STAND TO OPERATE THE EQUIPMENT. THE GROUND WIRE MAY BE PLACED WITHIN 12" OF THE OTHER SIDES.
5. SPECIFY LENGTH OF GROUND RODS AT EACH CORNER.

| ITEM | QTY. | MATERIAL |
|---|---|---|
| av | | 1/0 bare copper (as required) 30'–0" Min. |
| p | | Connectors (as required) |
| | | |
| ai | 4 | Ground rods |
| aj | 4 | Clamp, ground rod, 1 per rod |
| | | |

GROUNDING GRID FOR PAD MOUNTED EQUIPMENT INSTALLATION

2000

UM48–5

METHOD 1

PREFERRED METHOD FOR INSTALLATION OF METERING IS TO MOUNT METER SOCKET ON BUILDING WALL.

METER HEIGHT SHALL BE 5'–0" TO CENTER OF METER.

METER SOCKET MUST NOT BE ATTACHED DIRECTLY TO PADMOUNTED TRANSFORMER.

CONDUIT SHALL BE USED FOR SECONDARY CONTROL WIRES TO METER SOCKETS.

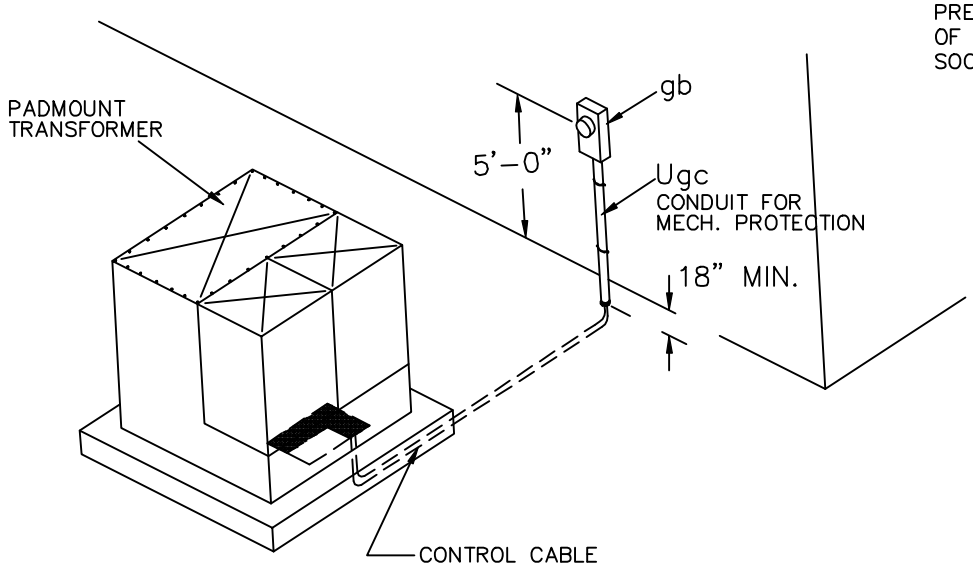


METHOD 2

METHOD TO USE IF METER CABINET MUST BE MOUNTED FREE STANDING.

METER SOCKET MUST NOT BE ATTACHED DIRECTLY TO PADMOUNTED TRANSFORMER.

4'–0" MINIMUM HEIGHT TO CENTER OF METER.

CONDUIT SHALL BE USED FOR SECONDARY CONTROL WIRES TO METER SOCKET.

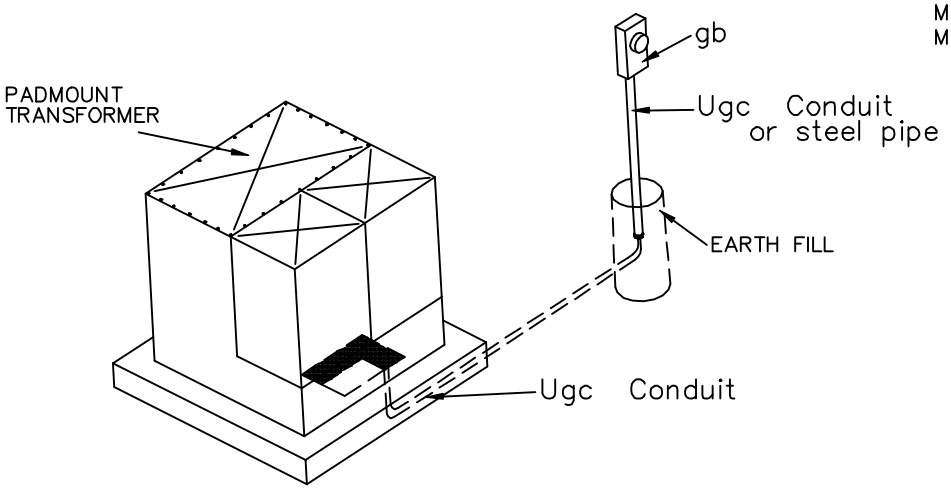


NOTE: CT & PT TO BE MOUNTED AS REQUIRED IN TRANSFORMER ENCLOSURE.

| ITEM | QTY. | MATERIAL |
|---|---|---|
| | | Control cable, as required |
| | | Pipe strap, as required |
| | | |
| gb | 1 | Meter socket |
| se | | Potential transformer, as required |
| | | |
| Ugc | | Steel pipe, as required |
| Ugc | | Conduit, as required |
| Usd | | Current transformer, as required |
| | | |

C.T. METER INSTALLATION
SINGLE PHASE

2000

UM8–6

UM8–7–A METER ON BUILDING
UM8–7–B METER ON TAP BOX
UM8–7–C METER ON LOAD CENTER

METER SOCKET MUST NOT BE ATTACHED
DIRECTLY TO PADMOUNTED TRANSFORMER.

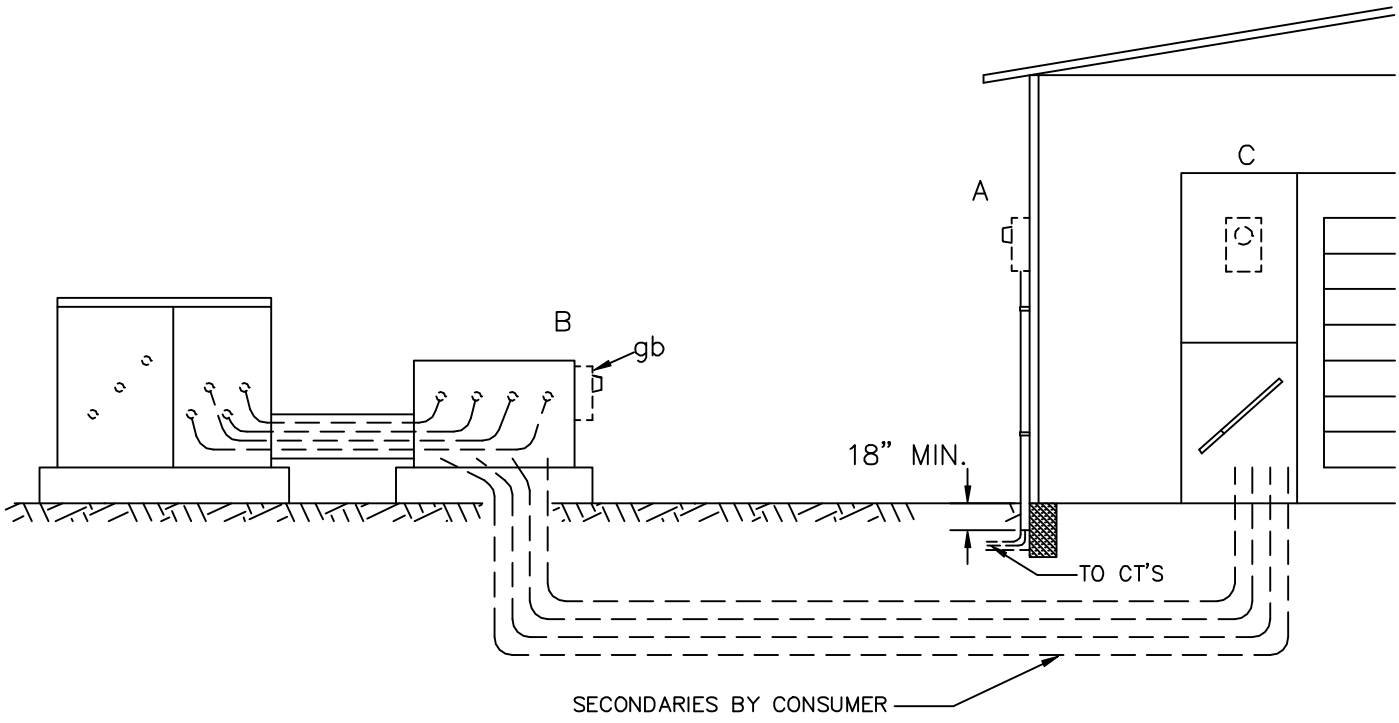


| ITEM | QTY. | MATERIAL |
|---|---|---|
| | | Control cable, as required |
| | | Pipe strap, as required |
| | | |
| gb | 1 | Meter socket |
| se | | Potential transformer, as required |
| | | |
| Ugc | | Conduit, as required |
| Ugc | | Steel pipe, as required |
| Usd | | Current transformer, as required |
| | | |

C.T. METER INSTALLATION
THREE PHASE

2000 UM8–7–__

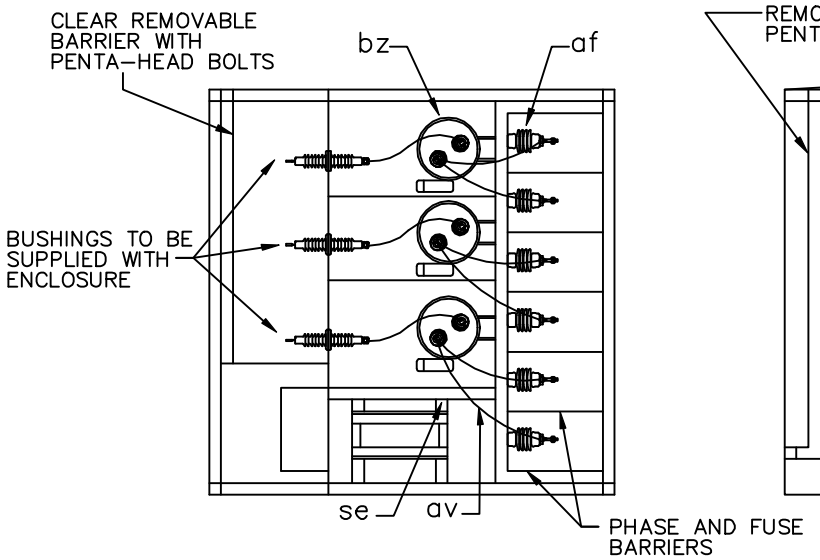


TOP VIEW

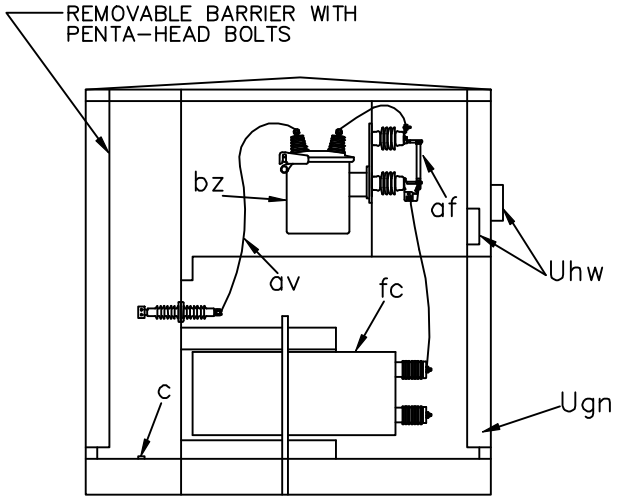


SIDE VIEW

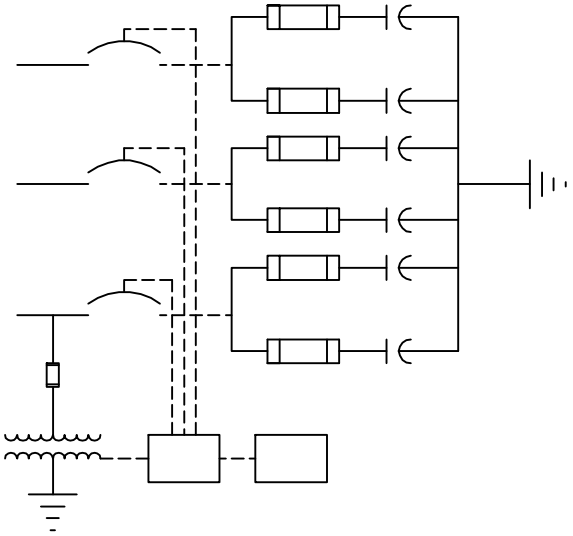

ONE LINE DIAGRAM

| ITEM | QTY. | MATERIAL |
|---|---|---|
| c | | Bolts, machine, as required |
| | | |
| af | 6 | Power fuse, current limiting |
| av | | Jumpers, copper, as required |
| bz | 3 | Single phase oil switch |
| fc | 6 | Shunt capacitor |
| se | 1 | Potential transformer line voltage to |
| | | 120 VAC |
| | 3 | Bushing with spade |
| | | |
| Ugn | 1 | Enclosure, as specified |
| Uhw | 2 | Signs, "DANGER" and "WARNING" |
| | | |

NOTES:

1. LOAD BREAK ELBOWS, STRESS CONES, FUSES OR SWITCH BLADES; GROUND SLEEVE IS NOT PART OF THIS ASSEMBLY. THEY SHOULD BE SPECIFIED SEPARATELY ON THE STAKING SHEETS.
2. TAMP WELL UNDER SLEEVE, LEAVE SLACK COIL OF CABLE IN GROUND SLEEVE.
3. PLACE 6" OF FILL AGAINST INSIDE EDGE OF GROUND SLEEVE.
4. GROUNDING UNIT TO BE SPECIFIED SEPARATELY.
5. INSTALL "WARNING" SIGN ON OUTSIDE OF ENCLOSURE AND "DANGER" SIGN INSIDE ENCLOSURE.

PAD MOUNTED SWITCHED CAPACITOR ENCLOSURE

2000 | UM9-2

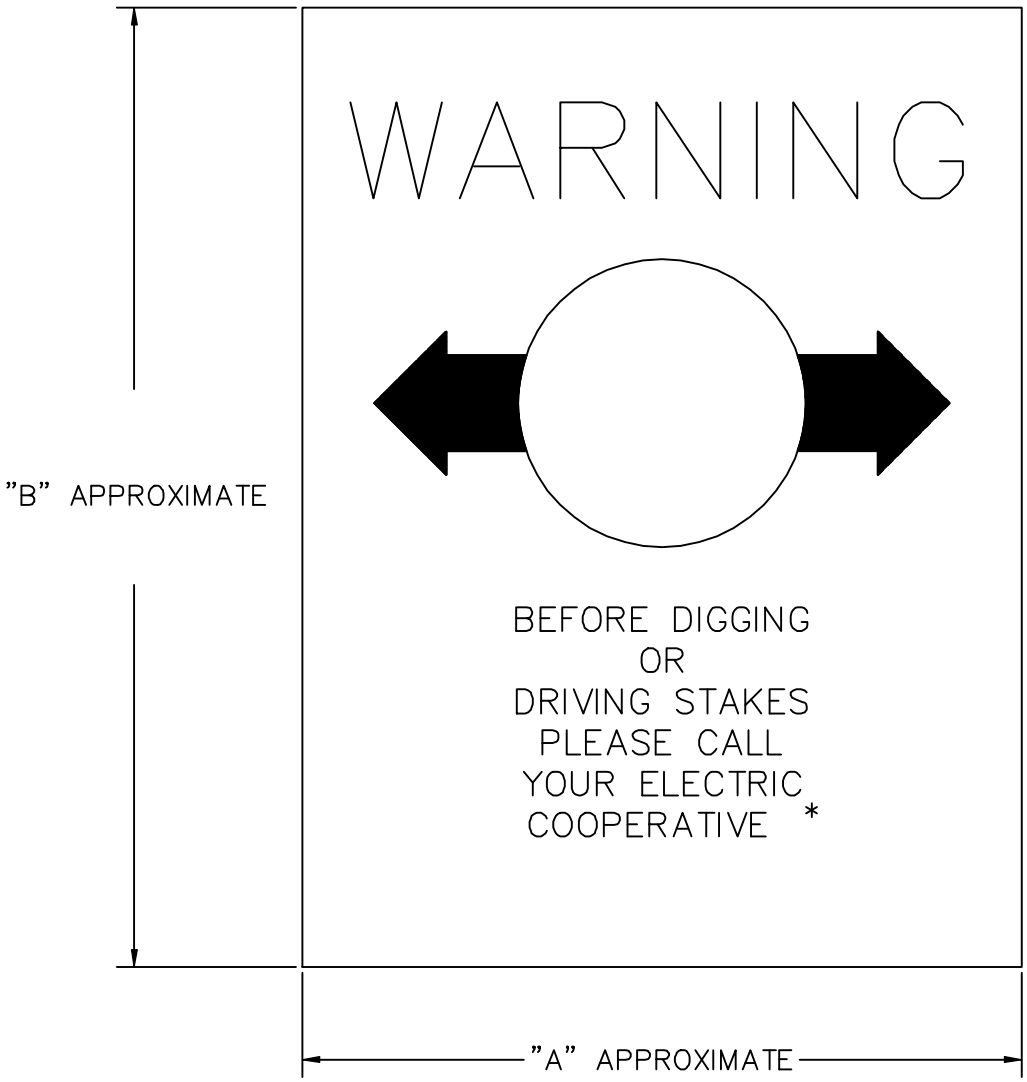


* COOPERATIVE NAME AND TELEPHONE NUMBER MAY BE INSERTED AS AN ALTERNATE.

NOTES:

1. BACKING MATERIAL SHALL BE 16 GAUGE GALVANIZED STEEL, OR EQUAL.
2. SIGN SHALL HAVE A YELLOW BACKGROUND WITH BLACK LETTERS.
3. SIGN SHALL BE SUPPORTED AND DISPLAYED AS SPECIFIED BY OWNER.
4. SIGN SHALL MEET ANSI Z535 STANDARD.

| WIDTH ("A") | HEIGHT ("B") |
|---|---|
| 4" | 5" |
| 7" | 12" |
| 3" | 12" |

CABLE ROUTE MARKER

2000 | UM12

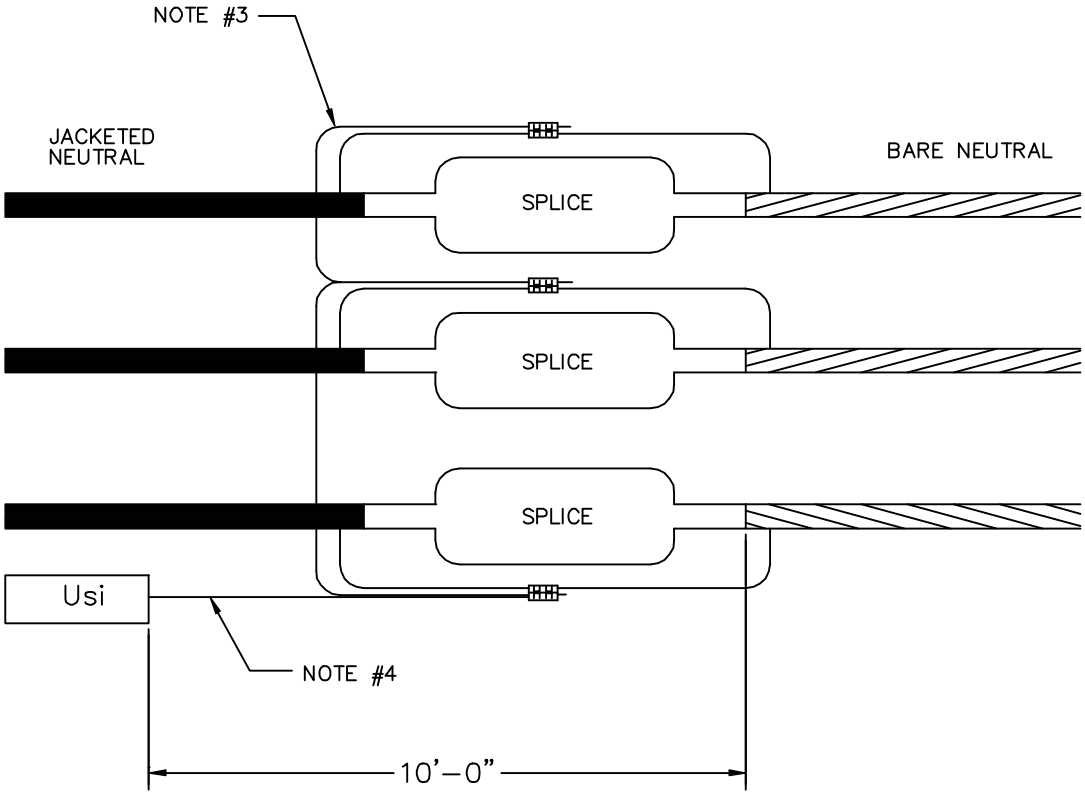


TOP VIEW

NOTES:

1. ENGINEER TO SPECIFY NUMBER AND TYPE OF ANODES. DESIGNATE AS:

   UM27-1-(1, 2, or 3)-(lbs.)-(M or Z)

   MAGNESIUM OR ZINC

2. MOISTURE SEAL AROUND CABLE NEUTRAL.

3. INSTALL FULL-SIZE CONCENTRIC NEUTRAL EXTENSION AS IN A PRIMARY CABLE SPLICE.

4. INSTALL No. 14 AWG INSULATED COPPER WIRE TO ANODE.

| ITEM | QTY. | MATERIAL |
|---|---|---|
| p | | Connector, compression, as required. |
| | | |
| Usi | | Anode, sacrificial, insulated, lead |
| | | length as required. |
| | | Size and quantity specified in note #1. |
| | | |

SACRIFICIAL ANODE
FOR CABLE SPLICE PROTECTION
( BARE TO JACKETED CABLE )

2000

UM27-1

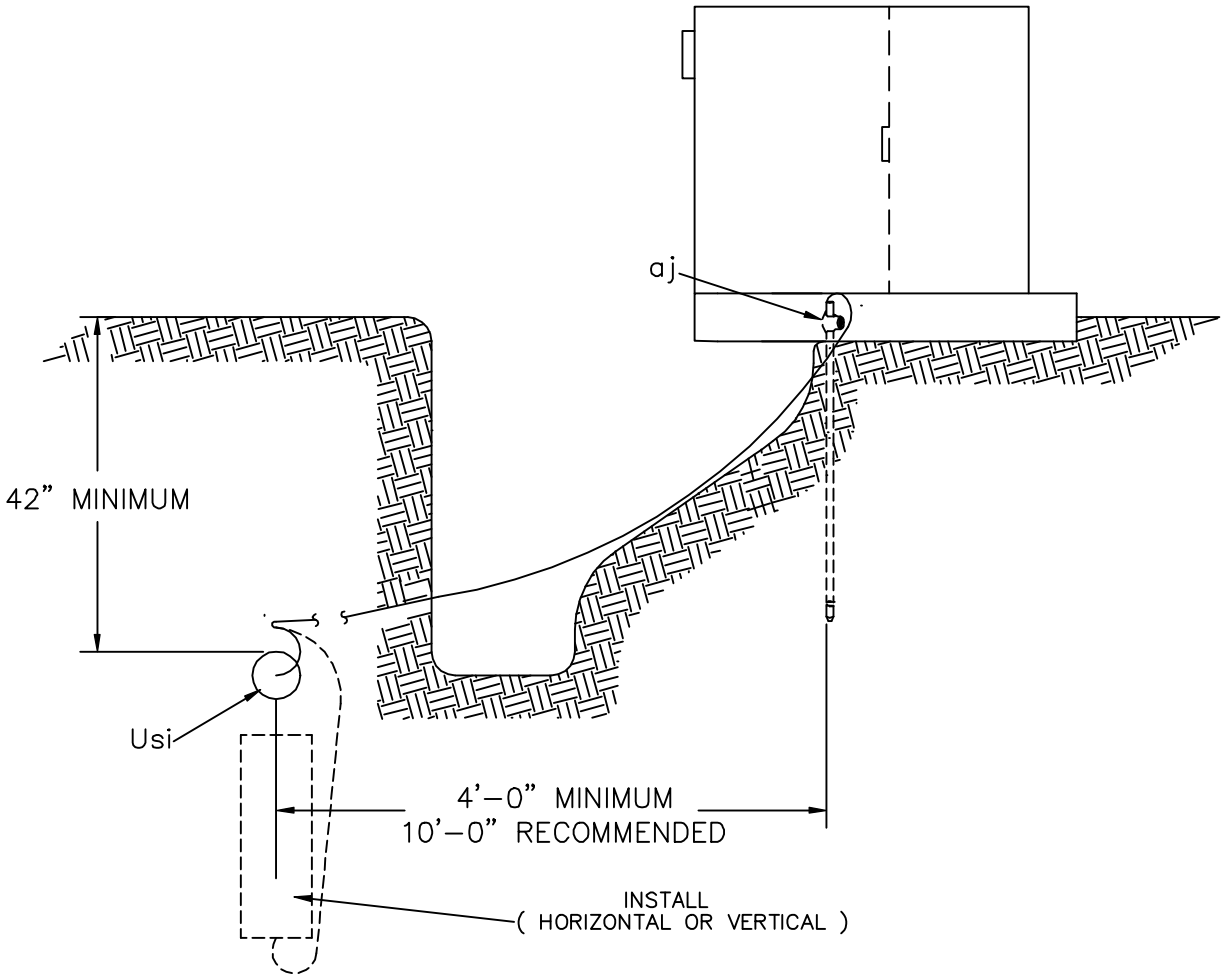


NOTE:

1. CONNECT ANODE LEAD WIRE INSIDE PADMOUNTED EQUIPMENT TO ENABLE TESTING OF ANODE OUTPUT.

| ITEM | QTY. | MATERIAL |
|---|---|---|
| p | | Connectors, compression, as required |
| | | |
| aj | | Clamps, ground rod, as required |
| | | |
| Usi | | Anode, sacrificial, as required |
| | | |

SACRIFICIAL ANODE
FOR EQUIPMENT
GROUND PROTECTION

2000

UM27–2

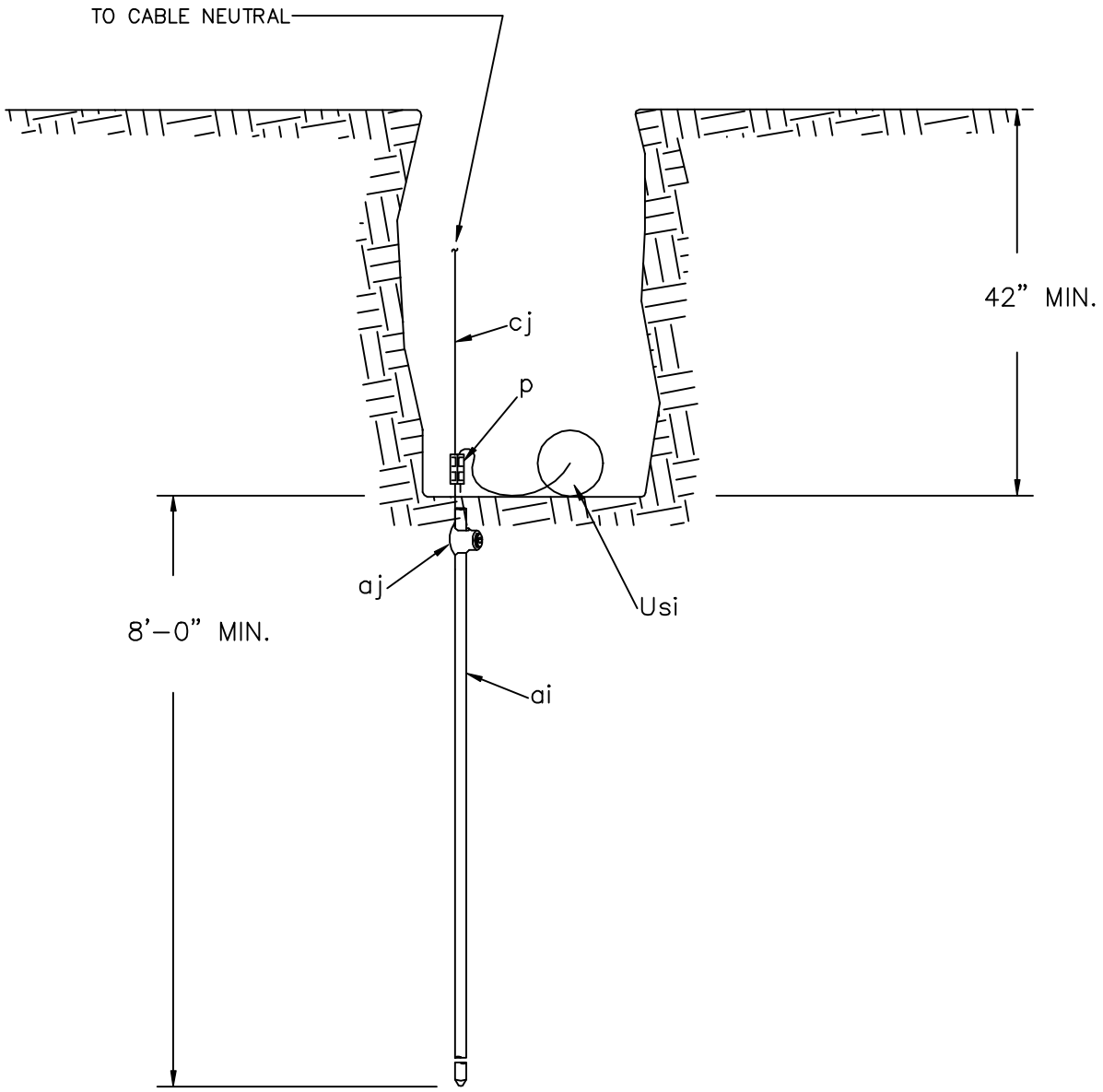


NOTES:

1. INSTALLATION OF AN ANODE IS NOT REQUIRED AT ALL GROUNDING LOCATIONS.
2. ROUTE ANODE LEAD SO AS TO BE ACCESSIBLE FOR TESTING WHENEVER FEASIBLE. (SEE UNITS UM28 OR UM28-1.)

| ITEM | QTY. | MATERIAL |
|---|---|---|
| p | 1 | Connector, compression |
| ai | 1 | Ground rod, 5/8" x 8'-0" Copper clad |
| aj | 1 | Clamp, ground rod |
| cj | | Ground wire, #6 S.D. copper (min.) |
| | | |
| Usi | 1 | Anode, sacrificial |

SACRIFICIAL ANODE
FOR
CABLE GROUND PROTECTION

2000

UM27-3

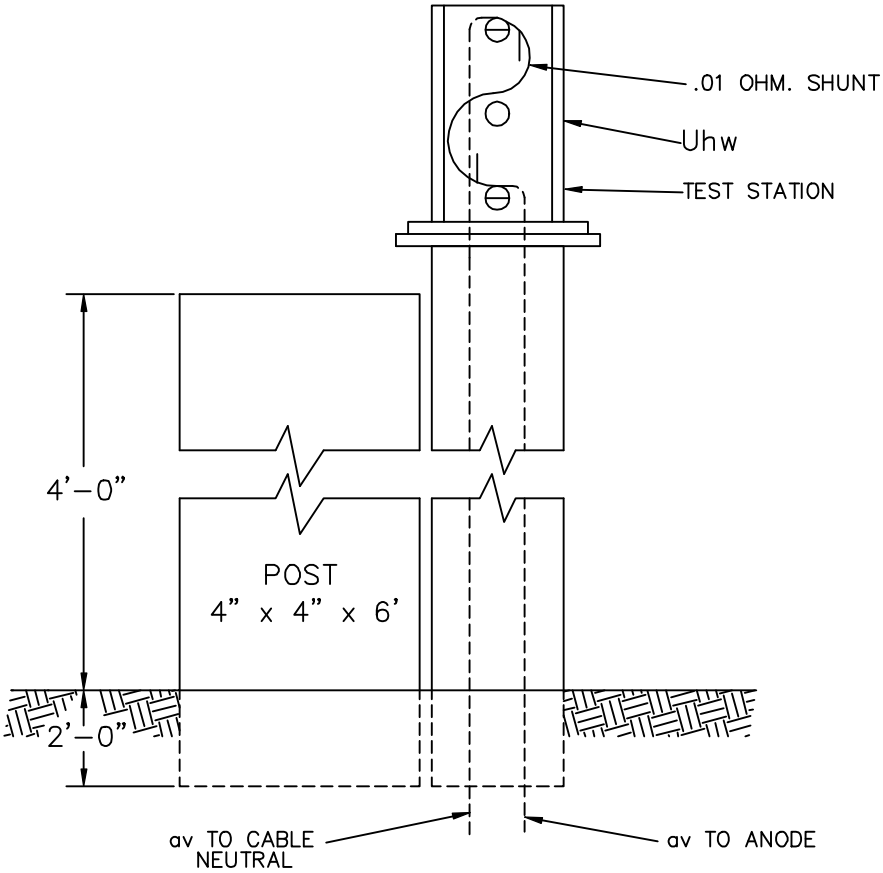


UM28 ABOVE GROUND LEVEL.

UM28–1 FLUSH WITH GROUND LEVEL
(DELETE POST AND ADD SUITABLE METHOD
FOR LOCATING.)

NOTE:

CONNECTIONS TO BE MADE IN ACCORDANCE WITH MANUFACTURER'S INSTRUCTIONS.

| ITEM | QTY. | MATERIAL |
|---|---|---|
| | 1 | 4" x 4" x 6' Treated post |
| | 1 | Test station, anode |
| | 1 | Shunt, anode |
| av | | Jumper, insulated, as required |
| | | |
| Uhw | 1 | Sign, "WARNING" |

TEST STATION

2000 UM28

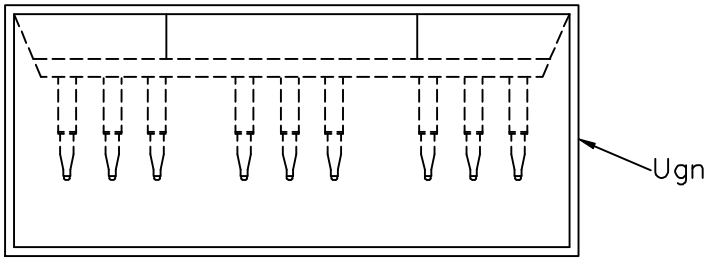


SECTION "B–B"

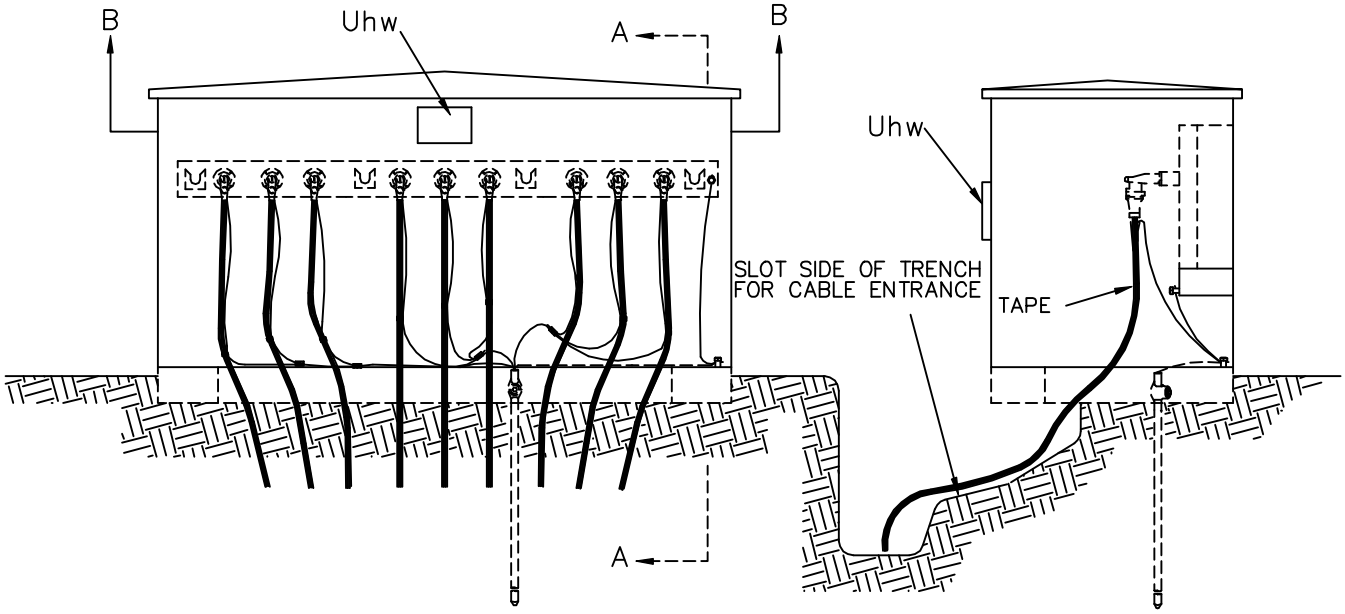


SECTION "A–A"

NOTES:

1. THE FOLLOWING UNITS/ASSEMBLIES ARE NOT PART OF THIS UNIT. SPECIFY SEPARATELY:

   A. MULTIPOINT TERMINATIONS AND OTHER ACCESSORIES
   B. FUSED OR NON–FUSED LOADBREAK ELBOWS
   C. GROUNDING ASSEMBLIES UM48–1 OR OTHER
   D. PAD OR SLEEVE ASSEMBLIES (IF REQUIRED)

2. ALL NEUTRALS AND METALLIC NON–CURRENT CARRYING PARTS SHALL BE INTERCONNECTED AND GROUNDED.

3. INSTALL "WARNING" SIGN ON OUTSIDE SURFACE OF ENCLOSURE AND "DANGER" SIGN INSIDE ENCLOSURE.

| ITEM | QTY. | MATERIAL |
|---|---|---|
| p | | Connectors, as required |
| av | | Jumpers, as required |
| | | |
| Ugn | 1 | Enclosure |
| Uhw | 2 | Signs, "DANGER" and " WARNING" |

MULTI PHASE
SECTIONALIZING ENCLOSURE
PAD OR SLEEVE MOUNTED

2000 UM33

TRANSFORMER INSTALLATION
( FRONT VIEW )

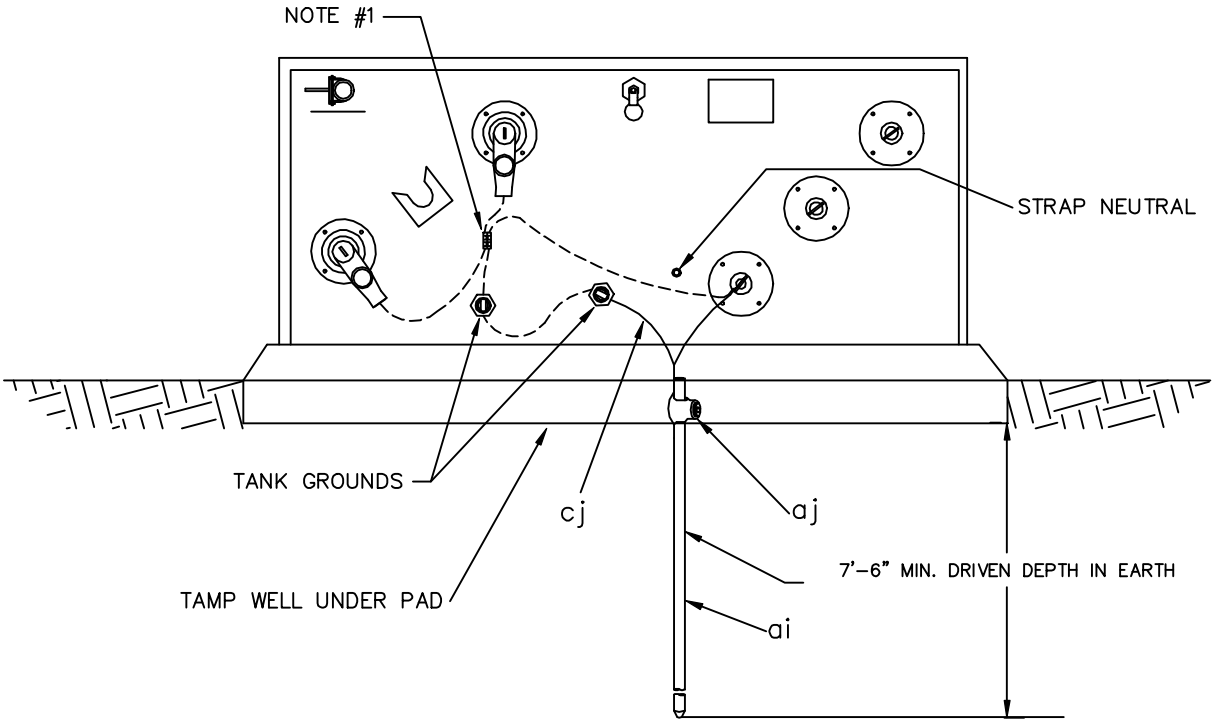


DEADFRONT FUSE ENCLOSURE
( TOP VIEW )

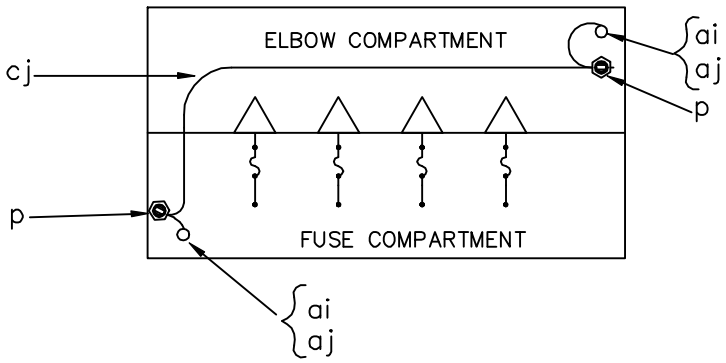


NOTES:

1. TIE CONCENTRIC NEUTRALS TOGETHER BEFORE TAP TO GROUND LOOP TO ASSURE SAME CONDUCTIVITY AS CABLE NEUTRAL.

| ITEM | QTY | MATERIAL |
|---|---|---|
| p | | Connectors, ( as required ) |
| | | |
| ai | | Ground rods, specify number and length |
| aj | | Clamp, ground rod( 1 per rod ) |
| | | |
| cj | | Ground wire, #4 copper ( as required ) |

GROUNDING ASSEMBLY FOR PAD MOUNTED SINGLE PHASE TRANSFORMERS AND ENCLOSURES

2000

UM48-1

TRANSFORMER INSTALLATION
( FRONT VIEW )

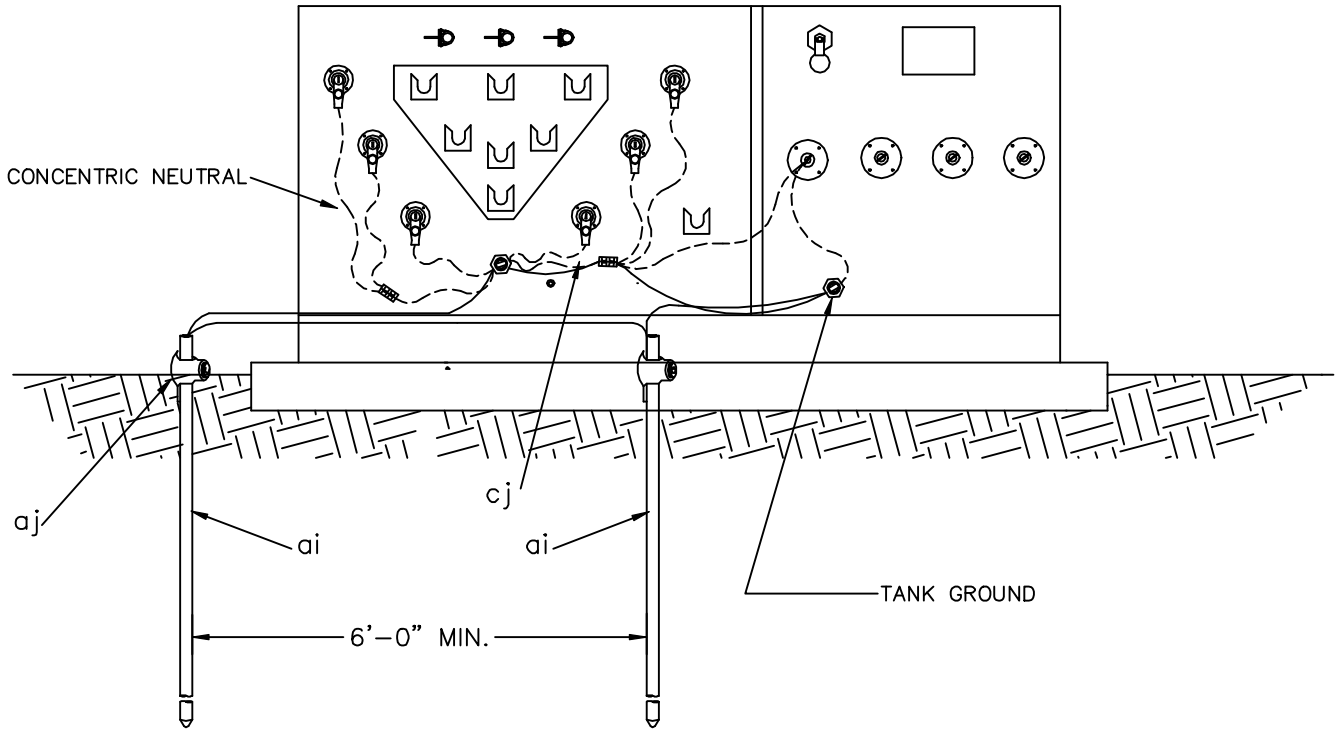


DEAD FRONT FUSE ENCLOSURE
( TOP VIEW )

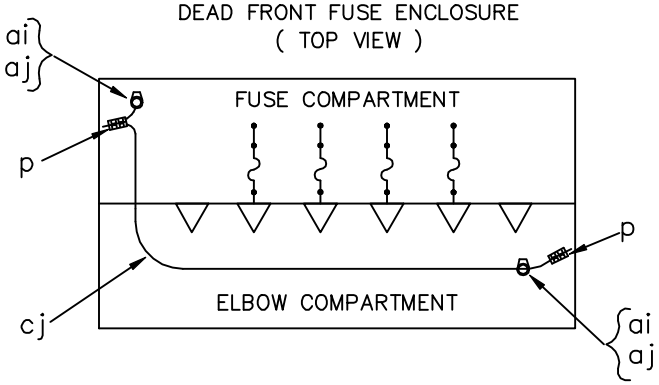


NOTES:

1. TIE CONCENTRIC NEUTRALS TOGETHER BEFORE TAP TO GROUND LOOP TO ASSURE SAME CONDUCTIVITY AS CABLE NEUTRAL.
2. MULTIPLE RODS MAY NOT FIT INSIDE ENCLOSURE. ONLY 1 ROD MUST BE INSTALLED INSIDE ENCLOSURE.
3. THE QUANTITY OF RODS IS TO BE DETERMINED BY THE SPECIFIER. THE USE OF TWO RODS RATHER THAN ONE AT A MUTI–PHASE TRANSFORMER OR ENCLOSURE IS NOT A STANDARD OR REQUIREMENT BY RUS.

| ITEM | QTY | MATERIAL |
|---|---|---|
| p | | Connectors, as required |
| | | |
| ai | | Ground rods, specify number and length |
| aj | | Clamp, ground rod ( 1 per rod ) |
| | | Jumpers, copper, as required |
| cj | | Ground wire, #4 copper min. (as required) |

GROUNDING ASSEMBLY FOR PAD MOUNTED MULTI PHASE TRANSFORMERS AND ENCLOSURES

2000 UM48–2

NOTES:

1. #2 THRU 4/0 CONDUCTOR – USE #4 BARE, SOLID CU JUMPER (av) #4 STRD CU GROUND WIRE (cj) 500 MCM CONDUCTOR – USE #2/0 BARE SOLID CU JUMPER (av) #2 STRD CU GROUND WIRE (cj).
2. ENGINEER TO SPECIFY NUMBER AND LENGTH OF GROUND RODS.
3. MOISTURE SEAL AROUND CONNECTIONS TO THE JACKETED CABLE NEUTRAL. USE SOLID COPPER INSIDE AND EXTENDED THROUGH MOISTURE SEAL.
4. FOUR GROUNDS PER MILE MINIMUM. MORE REQUIRED WITH HIGH GROUND RESISTANCE.
5. GROUND RODS MAY BE INSTALLED IN SEPARATE PITS SPACED 30 FEET APART.

| ITEM | QTY. | MATERIAL |
|---|---|---|
| p | | Connector, compression as required |
| | | |
| ai | | Ground rods |
| aj | | Clamp, ground rod, as required |
| av | | Jumper, See Note #1 |
| cj | | Grounding wire, #4, #2, copper |
| cj | | Jumpers, (2) – #14 stranded leads |
| | | |

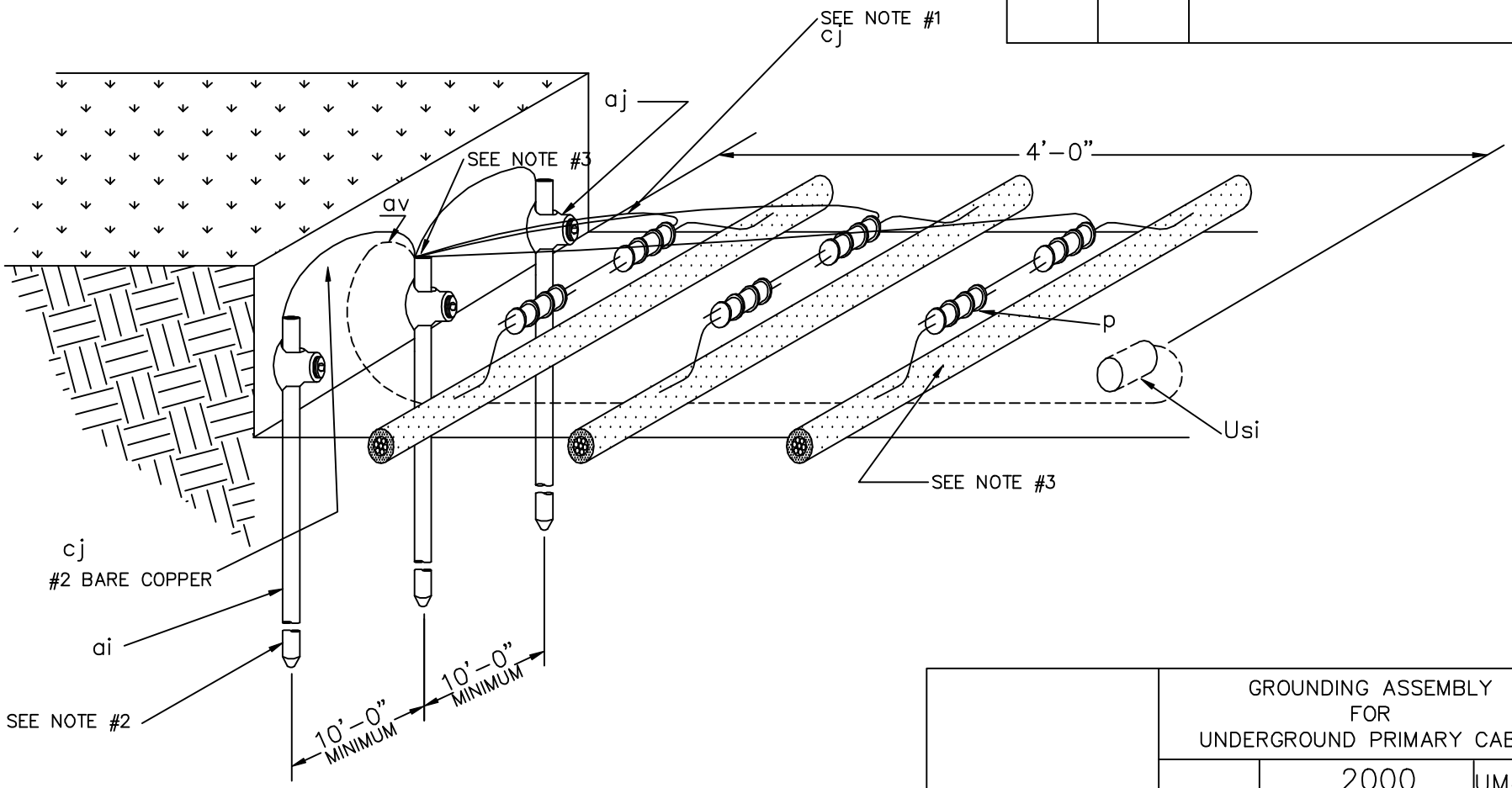


GROUNDING ASSEMBLY
FOR
UNDERGROUND PRIMARY CABLE

2000 UM48–3

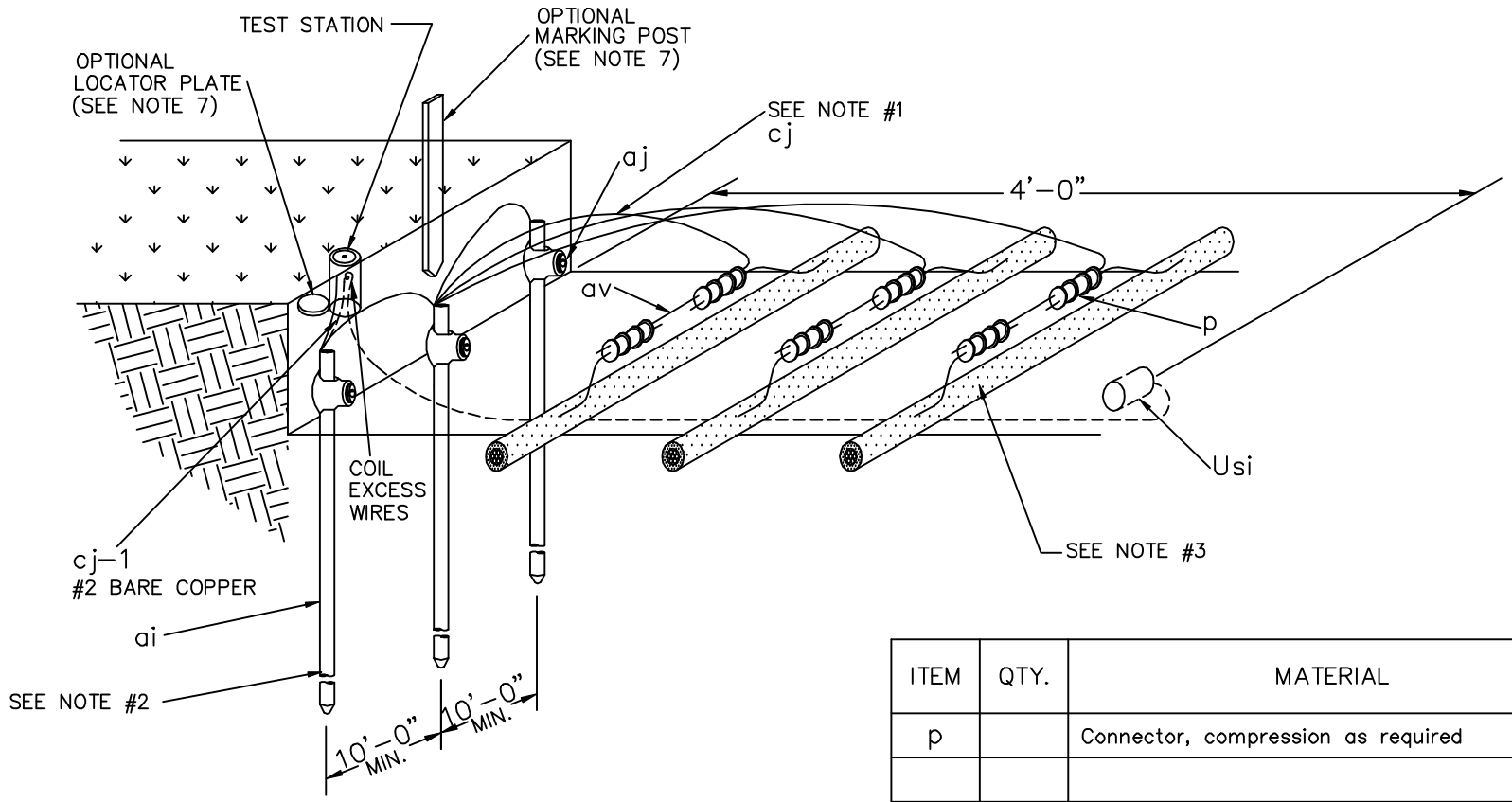


NOTES:

1. #2 THRU 4/0 CONDUCTOR – USE #4 BARE, SOLID CU. JUMPER (av) #4 STRD. CU. GROUND WIRE (cj) 500 MCM CONDUCTOR – USE #2/0 BARE, SOLID CU. JUMPER (av) #2 STRD. CU. GROUND WIRE (cj).
2. ENGINEER TO SPECIFY NUMBER AND LENGTH OF GROUND RODS.
3. MOISTURE SEAL AROUND CONNECTIONS TO THE JACKETED CABLE NEUTRAL. USE SOLID COPPER INSIDE EXTENDED THROUGH MOISTURE SEAL.
4. FOUR (4) GROUNDS PER MILE MINIMUM. MORE REQUIRED WITH HIGH GROUND RESISTANCE.
5. INSTALL TEST STATION EVEN WITH GRADE.
6. GROUND RODS MAY BE INSTALLED IN SEPARATE PITS SPACED 30 FEET APART.
7. SEE DRAWING UX–7 FOR POSSIBLE LOCATING METHODS.

| ITEM | QTY. | MATERIAL |
|---|---|---|
| p | | Connector, compression as required |
| | | |
| ai | | Ground rods |
| aj | | Clamp, ground rod, as required |
| av | | Jumper, copper (See Note #1) |
| cj | | Grounding wire #4, #2, copper |
| cj | | Jumper (2) – #14 stranded leads |
| | | |
| | 1 | Test station, flush mount |
| | | |

GROUNDING ASSEMBLY FOR UNDERGROUND PRIMARY CABLE ( WITH TEST STATION )

2000 UM48–4

TOP VIEW

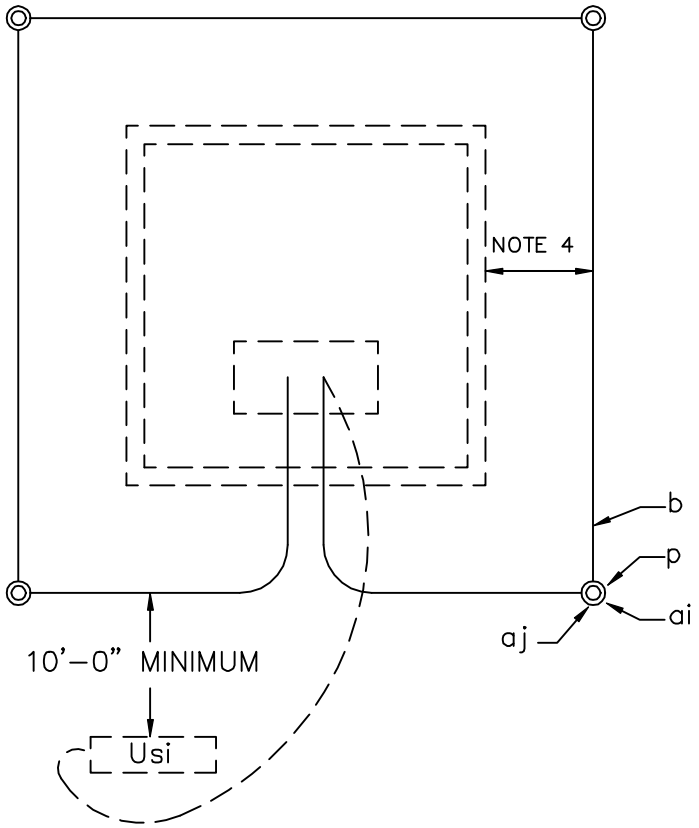


NOTE:

CONNECT ANODE, LEAD INSIDE PAD MOUNTED ENCLOSURES FOR TESTING PURPOSES.

FRONT VIEW

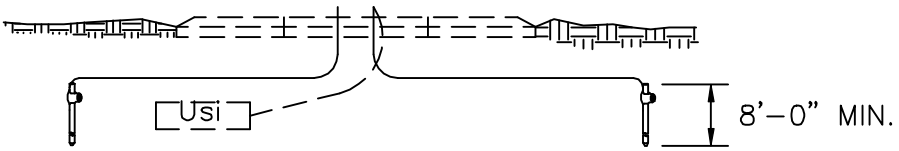


NOTES:

1. PLACE ONE GROUND ROD AT EACH CORNER.
2. GROUNDING GRID 1/0 BARE COPPER BURIED 6" BELOW GROUND, RUN WIRE INTO BASEMENT AND ALLOW 5'–0" FOR GROUNDING LIVE FRONT SWITCH / FUSE ENCLOSURES.
3. PAD OR BASEMENT IS NOT PART OF THIS UNIT.
4. PLACE GROUND WIRE A MINIMUM OF 24" AWAY FROM THE SIDE OR SIDES OF PAD THAT A PERSON WOULD STAND TO OPERATE THE EQUIPMENT. THE GROUND WIRE MAY BE PLACED WITHIN 12" OF THE OTHER SIDES.
5. SPECIFY LENGTH OF GROUND RODS AT EACH CORNER.

| ITEM | QTY. | MATERIAL |
|---|---|---|
| av | | 1/0 bare copper (as required) 30'–0" Min. |
| p | | Connectors (as required) |
| | | |
| ai | 4 | Ground rods |
| aj | 4 | Clamp, ground rod, 1 per rod |
| | | |

GROUNDING GRID FOR PAD MOUNTED EQUIPMENT INSTALLATION

2000

UM48–5

FRONT VIEW

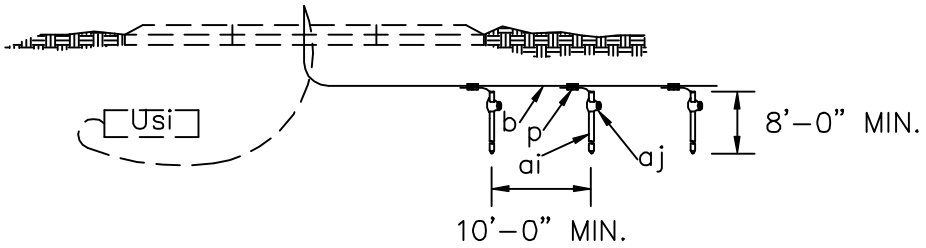


NOTE:
CONNECT ANODE LEAD INSIDE PAD MOUNTED ENCLOSURES FOR TESTING PURPOSES

TOP VIEW

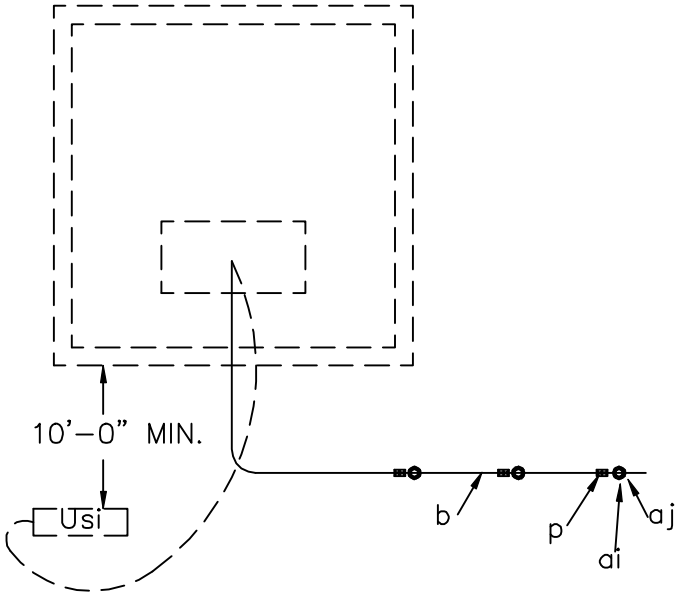


NOTES:

1. PLACE A MINIMUM OF TWO GROUND RODS IN SERIES. MINIMUM DISTANCE BETWEEN GROUND UNIT ASSEMBLIES – 10'–0".

2. GROUNDING GRID 1/0 BARE COPPER BURIED 6" BELOW GROUND, RUN WIRE INTO BASEMENT AND ALLOW 5'–0" FOR GROUNDING LIVE FRONT SWITCH / FUSE ENCLOSURES.

3. PAD OR BASEMENT IS NOT PART OF THIS UNIT.

4. SPECIFY NUMBER AND LENGTH OF GROUND RODS.

| ITEM | QTY. | MATERIAL |
|---|---|---|
| av | | 1/0 bare copper as required |
| p | | Connectors, as required |
| | | |
| ai | | Ground rods |
| aj | | Clamp, ground rod, 1 per rod |

GROUNDING ARRAY
FOR PAD MOUNTED
EQUIPMENT INSTALLATION

2000 | UM48–6

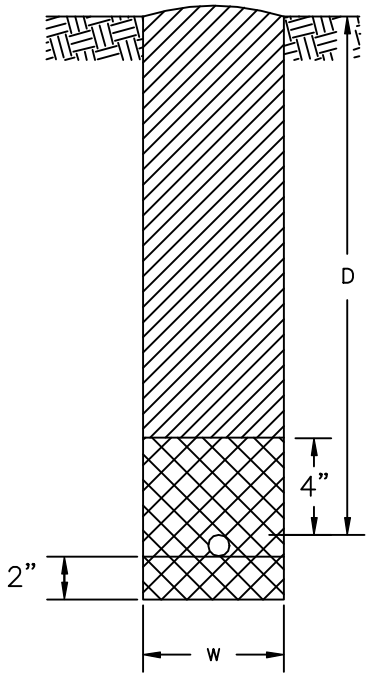


UR2 (D x W)
TRENCHING UNIT
ONE CABLE OR
CABLE ASSEMBLY

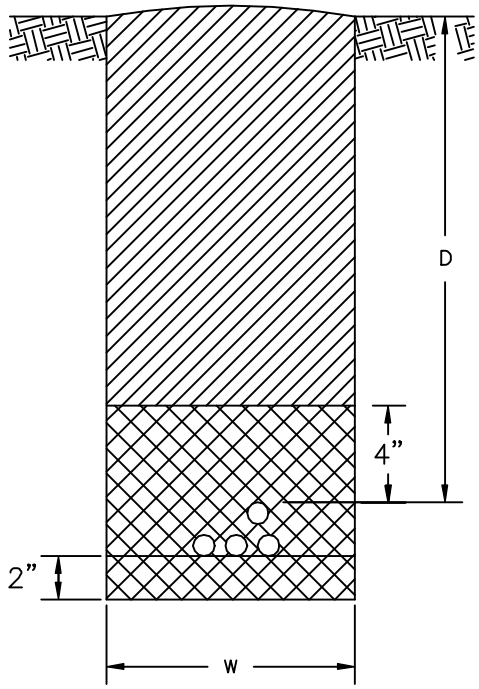


UR2–1 (D x W)
TRENCHING UNIT
MULTIPLE POWER CABLES
PRIMARY, SECONDARY OR SERVICE

LEGEND

SAND OR CLEAN SOIL

COMPACTED BACKFILL UNLESS OTHERWISE SPECIFIED

UNDISTURBED EARTH

NOTES:

1. DEPTH (D) AND WIDTH (W) ARE SPECIFIED IN DESCRIPTION OF UNITS.
2. DEPTHS SPECIFIED ARE TO FINISHED GRADE.
3. OVER–EXCAVATE TRENCHES AS NECESSARY TO ALLOW FOR (a) SAND BEDDING OR (b) LOOSE SANDY SOILS OR (c) WHERE MORE THAN ONE CABLE WILL INSTALLED IN TRENCH AND LAYING FIRST CABLE MAY CAUSE TRENCH DAMAGE AND REDUCTION IN DEPTH.
4. SAND BEDDING IS NOT PART OF THESE UNITS AND WILL BE SPECIFIED AS NEEDED.
5. BACKFILLING IS PART OF ALL TRENCHING UNITS INCLUDING JOINT–USE TRENCHES.
6. OPTIONAL WARNING TAPE IS RECOMMENDED TO BE PLACED ABOVE THE INSTALLED CABLE.

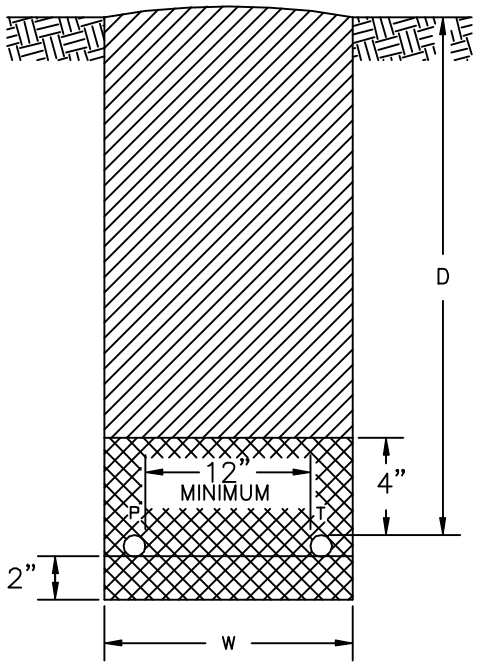


UR2–2 (D x W)
TRENCHING UNIT
POWER AND TELEPHONE CABLE

| | TRENCHES FOR DIRECT BURIAL CABLES | | |
|---|---|---|---|
| | | 2000 | UR2 TO UR2–2 |

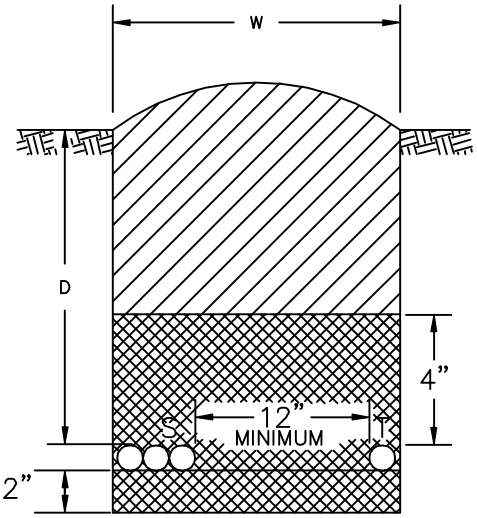


UR2–3 (D x W)
SERVICE OR SECONDARY
AND
TELEPHONE

LEGEND

BEDDING SAND OR CLEAN SOIL

COMPACTED BACKFILL UNLESS OTHERWISE SPECIFIED

UNDISTURBED EARTH

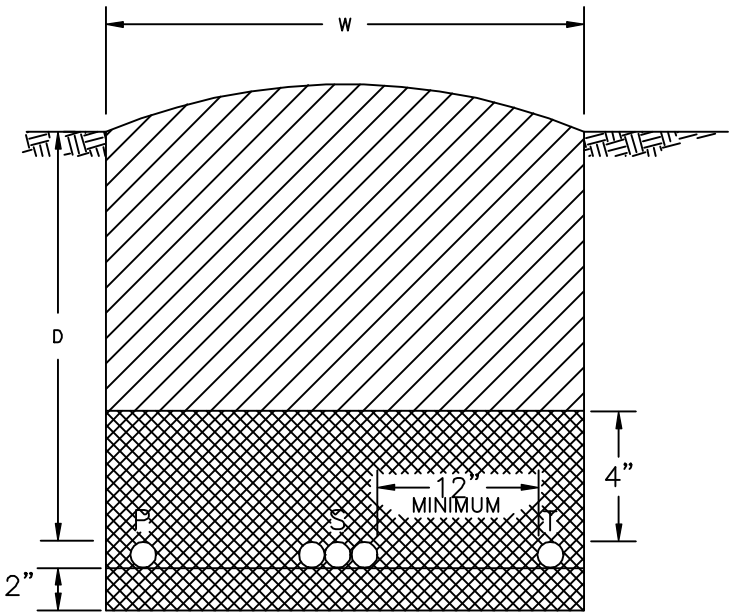


UR2–5 (D x W)
PRIMARY, SECONDARY
AND
TELEPHONE

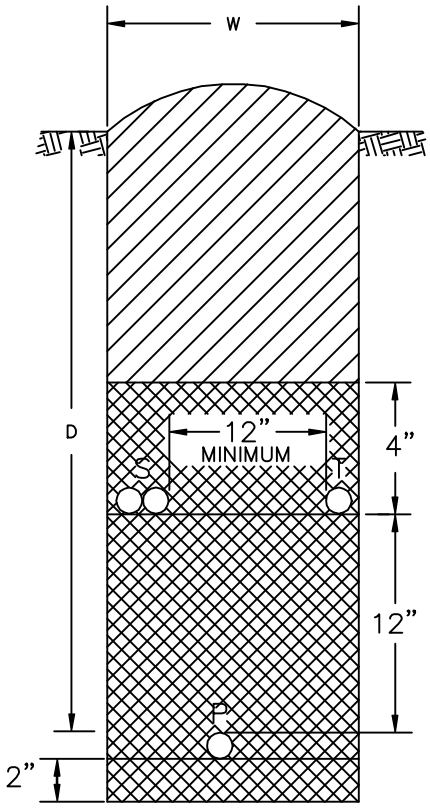


UR2–4 (D x W)
PRIMARY
AND
SECONDARY OR TELEPHONE

NOTES:

1. DEPTH (D) AND WIDTH (W) ARE SPECIFIED IN DESCRIPTION OF UNITS.
2. DEPTHS SPECIFIED ARE TO FINISHED GRADE.
3. OVER–EXCAVATE TRENCHES AS NECESSARY TO ALLOW FOR (a) SAND BEDDING OR (b) LOOSE AND SANDY SOILS OR (c) WHERE MORE THAN ONE CABLE WILL BE INSTALLED IN TRENCH AND LAYING OF FIRST CABLE MAY CAUSE TRENCH DAMAGE AND REDUCTION IN DEPTH.
4. SAND BEDDING IS NOT PART OF THESE UNITS AND WILL BE SPECIFIED AS NEEDED.
5. BACKFILLING IS PART OF ALL TRENCHING UNITS INCLUDING JOINT–USE TRENCHES.

| | TRENCHES FOR DIRECT BURIAL CABLES | | |
|---|---|---|---|
| | | 2000 | UR2–3 TO UR2–5 |

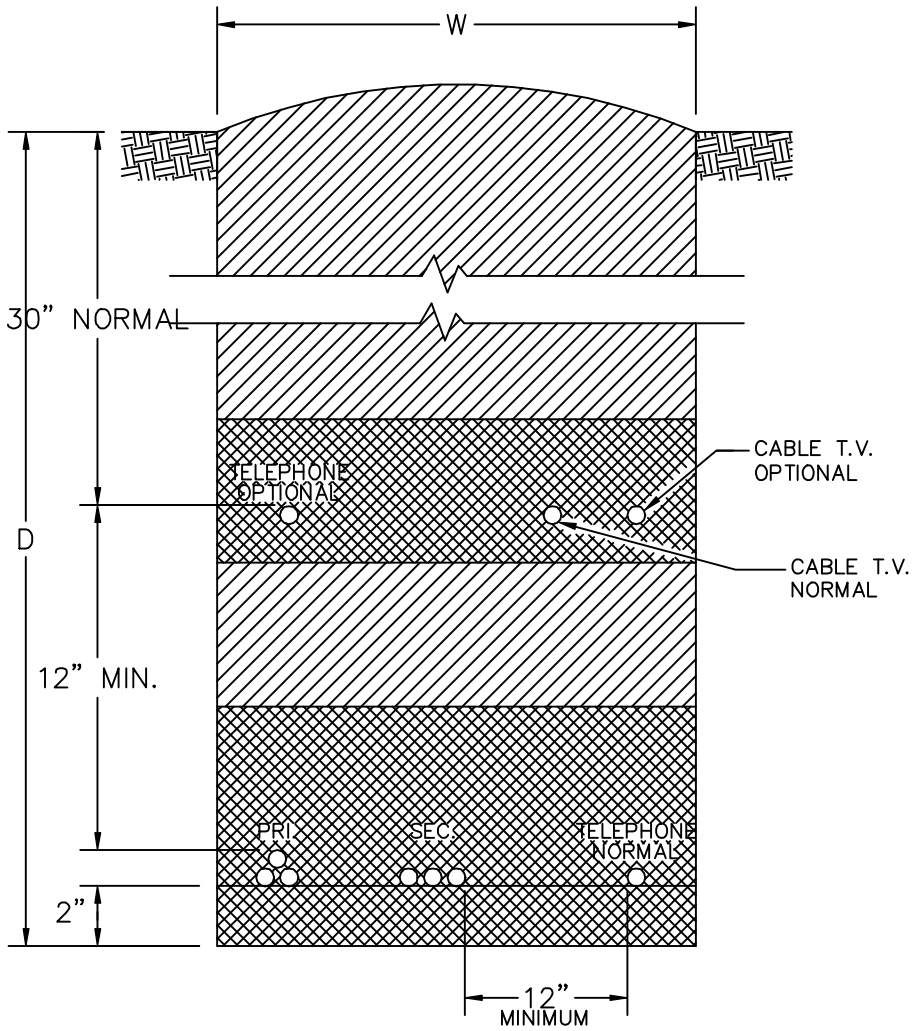


LEGEND

BEDDING SAND OR CLEAN SOIL

COMPACTED BACKFILL UNLESS OTHERWISE SPECIFIED

UNDISTURBED EARTH

PRI. = PRIMARY SUPPLY CABLES
SEC. = SECONDARY OR STREETLIGHT WIRES

URT–NT = NORMAL TRENCH 42" – 48" DEPTH
URT–ST = SUPER TRENCH 60" + DEPTH
W = 18" – 24" NORMAL

NOTES:

1. DEPTH (D) AND WIDTH (W) ARE SPECIFIED IN DESCRIPTION OF UNITS.
2. DEPTHS SPECIFIED ARE TO FINISHED GRADE.
3. OVER–EXCAVATE TRENCHES AS NECESSARY TO ALLOW FOR (a) SAND BEDDING OR (b) LOOSE AND SANDY SOILS OR (c) WHERE MORE THAN ONE CABLE WILL BE INSTALLED IN TRENCH AND LAYING OF FIRST CABLE MAY CAUSE TRENCH DAMAGE AND REDUCTION IN DEPTH.
4. SAND BEDDING IS NOT PART OF THESE UNITS AND WILL BE SPECIFIED AS NEEDED.
5. BACKFILLING IS PART OF ALL TRENCHING UNITS INCLUDING JOINT–USE TRENCHES.

| | | |
|---|---|---|
| | TRENCHES FOR DIRECT BURIAL CABLE | |
| | 2000 | UR2–NT<br>UR2–ST |

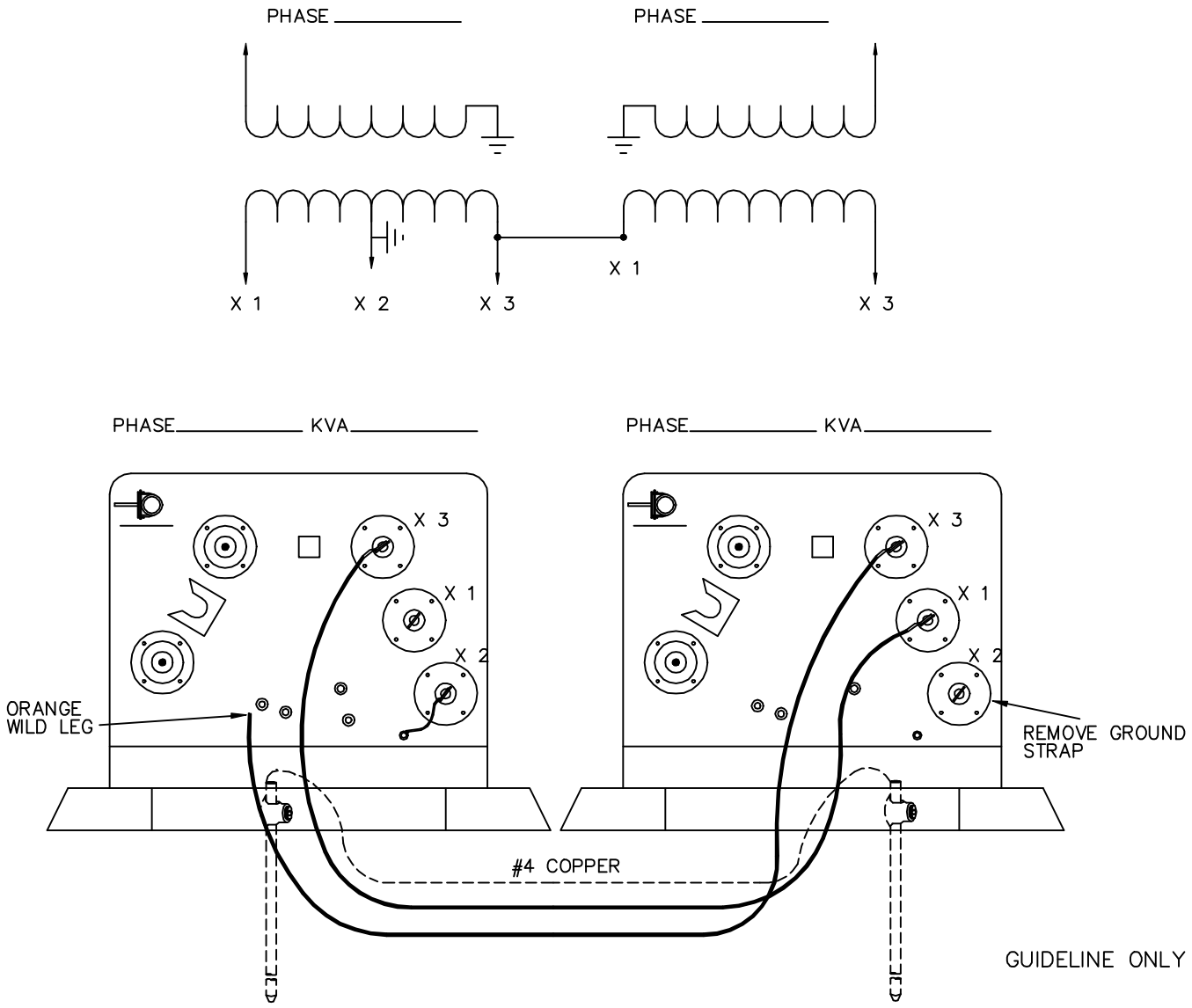


NOTE:

1. SPECIFY (2) APPLICABLE SINGLE PHASE TRANSFORMER ASSEMBLIES.

| | | | |
|---|---|---|---|
| | OPEN DELTA CONNECTION WITH SINGLE PHASE PADMOUNT TRANSFORMERS | | |
| | | 2000 | UX1 |

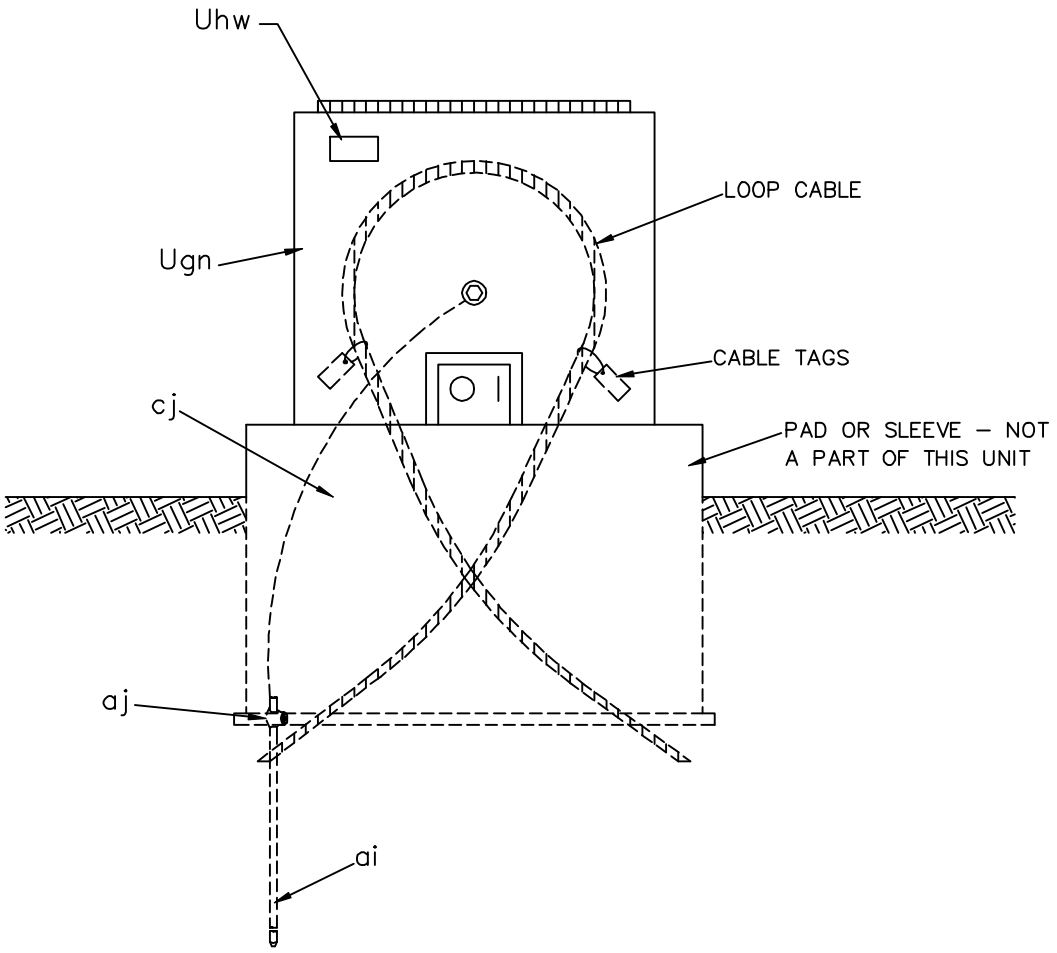


INSTALLATION NOTES:

1. LOOP CABLE TO PROVIDE SUFFICIENT LENGTH FOR TERMINATING IN A PAD–MOUNTED TRANSFORMER.

2. INSTALL CABLE TAGS ON CABLE.

| ITEM | QTY. | MATERIAL |
|---|---|---|
| ai | 1 | Ground rod |
| aj | 1 | Clamp, ground rod |
| cj | | As required |
| | | |
| Ugn | 1 | Primary junction enclosure |
| Uhw | 1 | Sign, "WARNING" |

SINGLE PHASE PAD–MOUNTED TRANSFORMER DEFERRED UNIT PEDESTAL TYPE

2000 UX2

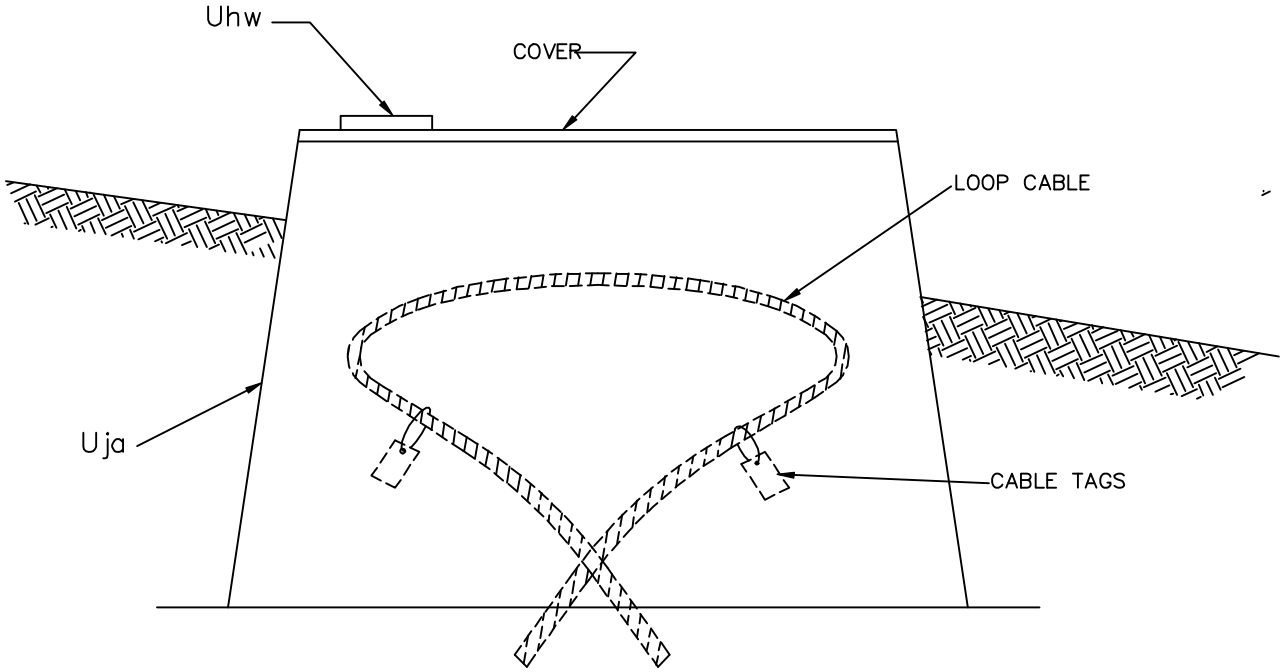


INSTALLATION NOTES:

1. LOOP CABLE TO PROVIDE SUFFICIENT LENGTH FOR TERMINATING IN A LOW PROFILE TRANSFORMER.

2. INSTALL CABLE TAGS ON CABLE.

3. COVER, IF METAL, SHALL BE GROUNDED

| ITEM | QTY. | MATERIAL |
|---|---|---|
| Uhw | 1 | Sign, "WARNING" |
| Uja | 1 | Transformer pad–sleeve combination |
| Uja | 1 | Cover |
| | | |

SINGLE PHASE PADMOUNTED TRANSFORMER DEFERRED UNIT PAD–SLEEVE TYPE

2000 UX3

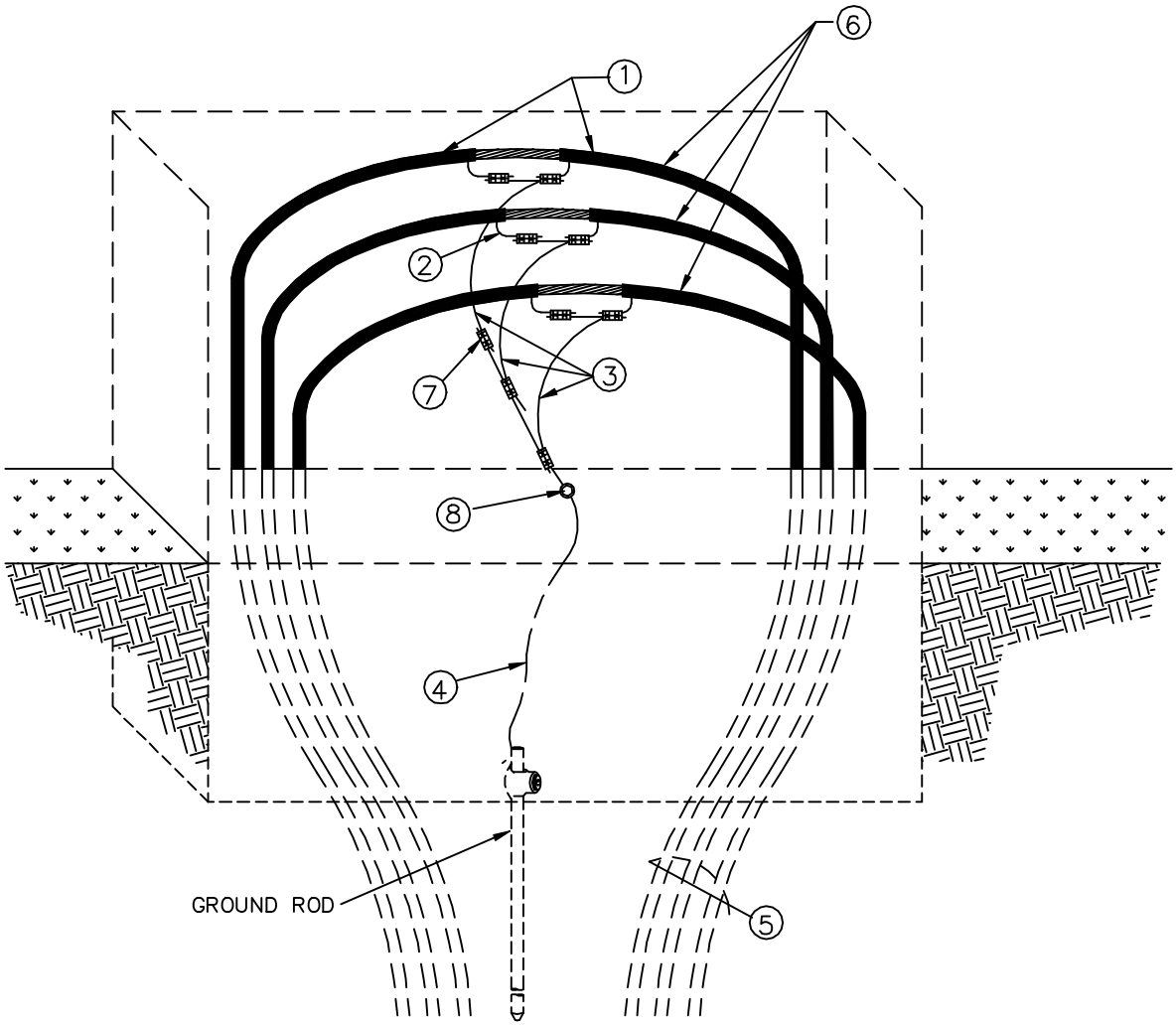


| REFERENCE NO. | MATERIAL |
|---|---|
| 1 | Label cable for direction leaving sectionalizer |
| 2 | Seal cable |
| 3 | Neutral extension |
| 4 | Ground bus |
| 5 | Leave sufficient slack in cable for future terminating |
| 6 | Label cable per phase (A, B or C) |
| 7 | Parallel compression connector |
| 8 | Box grounding connector |
| | |

GUIDELINE ONLY

INSTALLATION OF NEUTRAL CONNECTION IN ABOVE GRADE PEDESTAL

2000 UX4

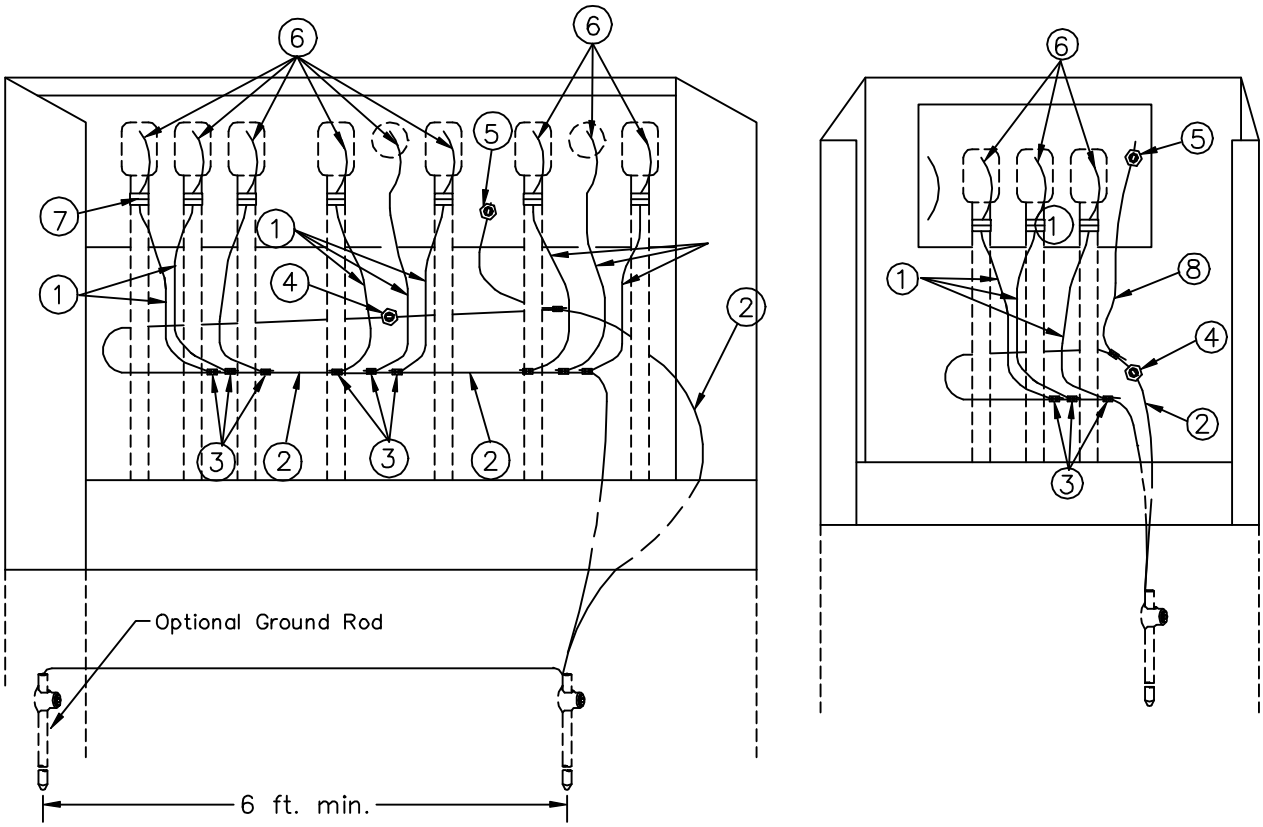


NOTE:

1. LEAVE SUFFICIENT SLACK IN NEUTRAL EXTENSION AND GROUND BUS TO FACILITATE REMOVAL AND PARKING OF PRIMARY CABLES.
2. MULTIPLE GROUND RODS MAY NOT FIT INSIDE ENCLOSURE.
3. MULTIPLE GROUND RODS MAY NOT BE NECESSARY.

| REFERENCE NO. | MATERIAL |
|---|---|
| 1 | Neutral extension |
| 2 | Ground bus |
| 3 | Parallel compression connector |
| 4 | Box grounding connector |
| 5 | Plate grounding connector |
| 6 | Bleed wire from elbow termination |
| 7 | Bleed wire compression connector |
| 8 | #6 SD CU |
| | |

GUIDELINE ONLY

SECTIONALIZING PEDESTAL GROUNDING

| | | |
|---|---|---|
| | 2000 | UX5 |

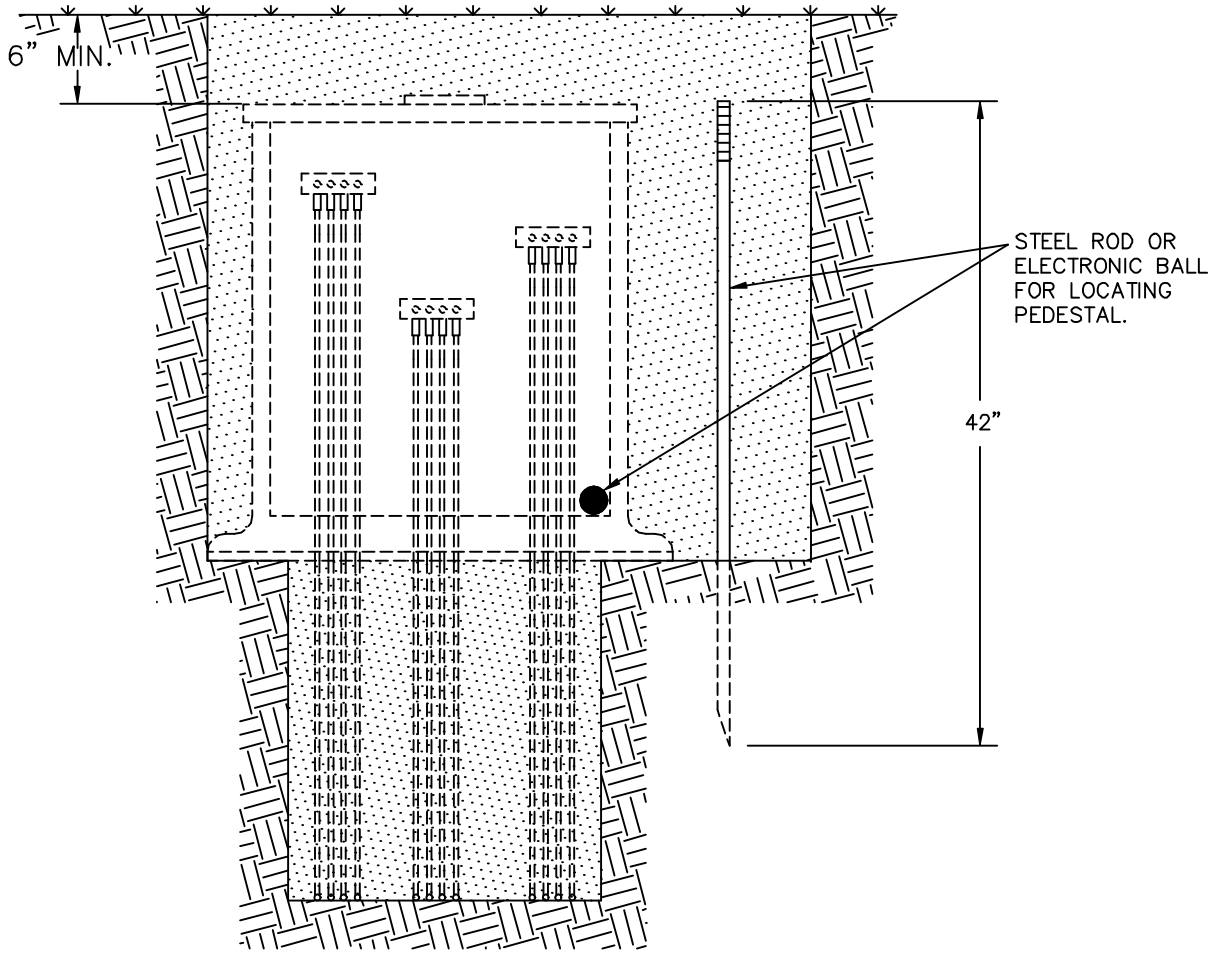


NOTE:

SEE DRAWING UK6

GUIDELINE ONLY

| | | |
|---|---|---|
| | LOCATION METHODS FOR BELOW GRADE ENCLOSURE | |
| | 2000 | UX7 |

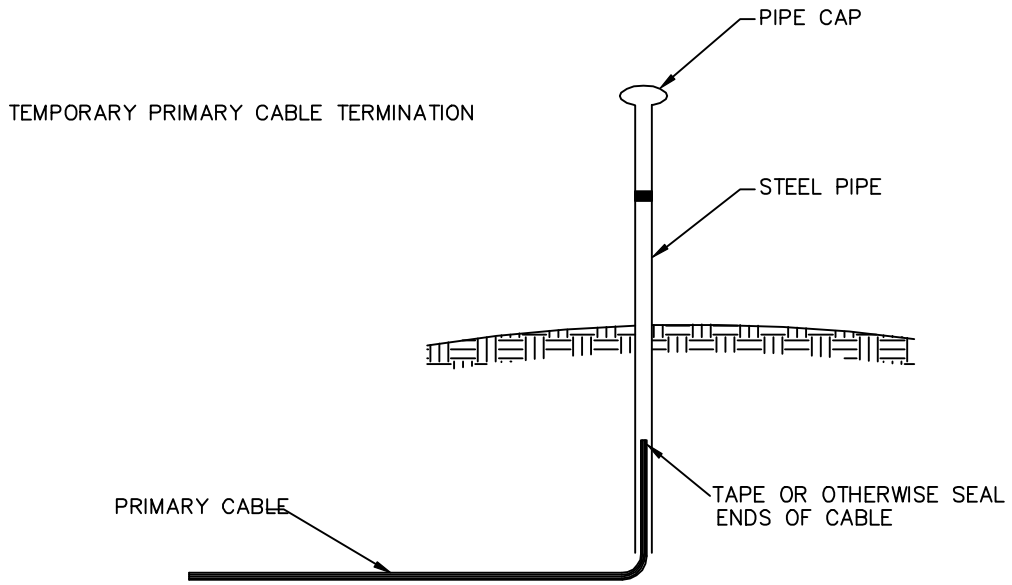


OR

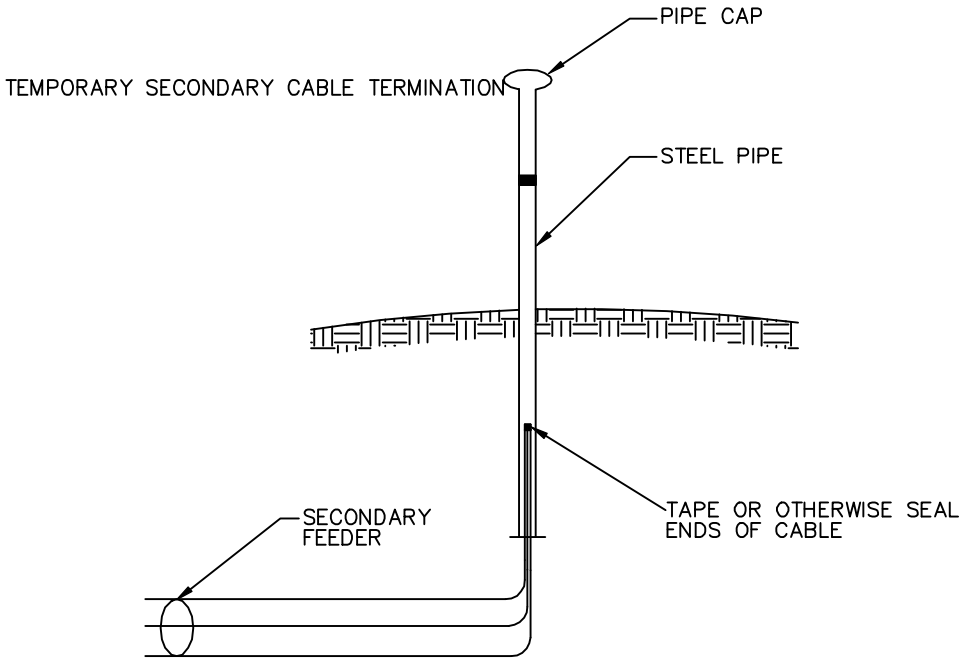


GUIDELINE ONLY

| | | | |
|---|---|---|---|
| | TEMPORARY PRIMARY OR SECONDARY CABLE TERMINATION FOR FUTURE USE | | |
| | | 2000 | UX8 |

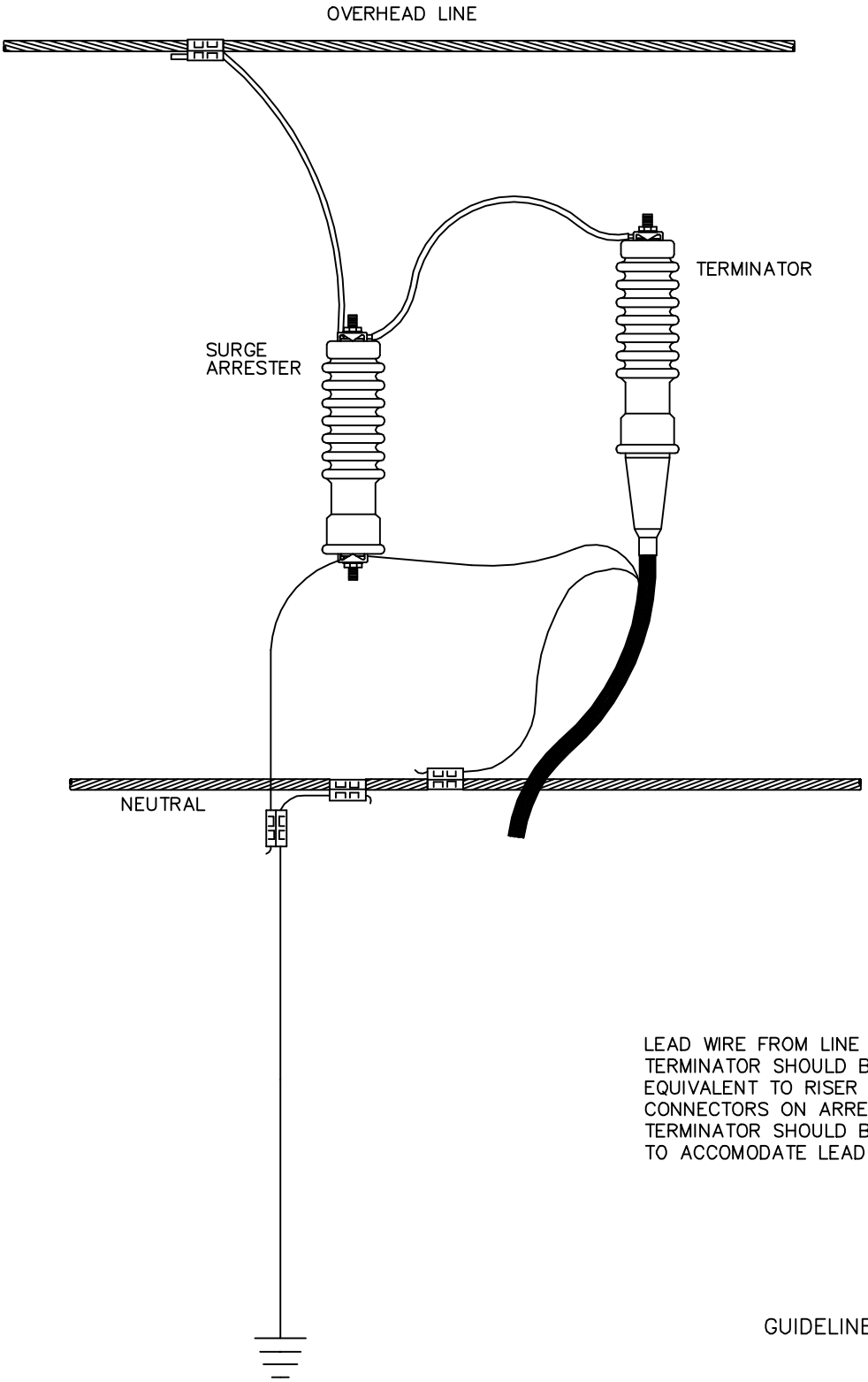


LEAD WIRE FROM LINE TO ARRESTER TO TERMINATOR SHOULD BE OF A SIZE EQUIVALENT TO RISER CONDUCTOR. CONNECTORS ON ARRESTER AND TERMINATOR SHOULD BE SPECIFIED TO ACCOMODATE LEAD WIRE.

GUIDELINE ONLY

| | | | |
|---|---|---|---|
| | CONNECTION OF TERMINATOR / ARRESTER TO OVERHEAD LINE | | |
| | | 2000 | UX11 |