400 Seventh Street, S.W.
Washington, D.C. 20590

U.S. Department
of Transportation

**National Highway
Traffic Safety
Administration**

Dear Crash Data Researchers/Users:

Thank you for choosing crash data from the National Highway Traffic Safety Administration (NHTSA) for your research or other use. The information contained in this motor vehicle crash report is collected, maintained and distributed in accordance with Public Law 89-564. In accordance with this Public Law, NHTSA is required not to release any case information until completion of quality control procedures. These procedures include a review of the case material to extract all names, licenses and registration numbers, non-coded interview material, non-research related researcher comments in the margins, non-factual data, and the production number portion of the vehicle identification number (VIN).

If you requested NHTSA to query its database files in order to identify a specific crash, then that query was made using non-personal descriptors you provided for use in our search. This motor vehicle crash may have been identified from a data search and matches the general, non-personal descriptors you provided, but we cannot confirm that this is the specific crash report you requested.

If you have any questions with regard to the above procedures, please contact the Field Operations Branch, Crash Investigation Division, National Center for Statistics and Analysis at 202-366-4820. Again, please be advised that we cannot confirm that this is the case that you have specifically requested nor can we certify the information to be correct.

*** *** ***

U.S. Department of Transportation
National Highway Traffic Safety Administration

CASE SUMMARY

NATIONAL ACCIDENT SAMPLING SYSTEM
CRASHWORTHINESS DATA SYSTEM

PSU 09 CASE NO. 167A TYPE OF ACCIDENT Two Vehicle, Fatal

A. DESCRIPTION OF THE ACCIDENT SEQUENCE AND ACCIDENT PECULIARITIES

(Provide a summary of the accident sequence as well as any particular event of the accident that is noteworthy. Injury mechanism and vehicle crashworthiness is the focus, not driver culpability. Do not include any personal identifiers.)

Vehicles one and two were traveling south on a five lane divided highway in lanes 5 and 3 respectively. Vehicle one departed the left roadside for unknown reasons and struck a concrete bridge abutment on it's front plane. V1 then went across two lanes and struck the back and left side of V2. Both vehicles were towed due to damage. The driver of V1 was killed. The driver of V2 was not reported as injured.

B. VEHICLE PROFILE(S)

Vehicle No.	Class of Vehicle	Year/Make/Model	Most Severe Damage Based on Vehicle Inspection		Component Failure
			Damage Plane	Severity Description	
01	Intermediate	1993 Infinity J30T	Front	Severe	None
02	Subcompact	1988 Hyundai Excel	Back	Severe	L/F seat back folding locks failed

DO NOT SANITIZE THIS FORM

C. PERSON PROFILE(S)

Vehicle No.	Person Role	Seat Position	Restraint Use	Most Severe Injury (TO BE COMPLETED BY ZONE CENTER)			
				Body Region	Injury Type	AIS	Injury Source
01	Driver	L-Front	Air Bag Only				
02	Driver	L-Front	None Used				

Body Region

Abdomen
Ankle—foot
Arm (upper)
Back-thoracolumbar spine
Brain
Chest
Ears
Eye
Elbow
Face
Forearm
Head—skull
Heart
Kidneys
Knee
Leg (lower)
Liver
Lower limbs(s) (whole or unknown part)
Mouth
Neck—cervical spine
Nose
Pelvic—hip
Pulmonary—lungs
Shoulder
Spleen
Thigh
Thyroid, other endocrine gland
Upper limb(s) (whole or unknown part)
Vertebrae
Whole body
Wrist—hand

Injury Type

Abrasion
Amputation
Avulsion
Burn
Concussion
Contusion
Crush
Detachment, separation
Dislocation
Fracture
Fracture and dislocation
Laceration
Other
Perforation, puncture
Rupture
Sprain
Strain
Total severance, transection
Unknown

Abbreviated Injury Scale

(1) Minor injury
(2) Moderate injury
(3) Serious injury
(4) Severe injury
(5) Critical injury
(6) Maximum (untreatable)
(7) Injured, unknown severity

DO NOT SANITIZE THIS FORM

PSU09 1995 Case Summary Form
CASE 167A
TYPE OF ACCIDENT: TWO VEHICLE, FATAL

A. DESCRIPTION OF THE ACCIDENT SEQUENCE AND ACCIDENT PECULIARITIES

Vehicles one and two were traveling south on a five lane divided highway in lanes 5 and 3 respectively. Vehicle one departed the left roadside for unknown reasons and struck a concrete bridge abutment on it's front plane. V1 then went across two lanes and struck the back and left side of V2. Both vehicles were towed due to damage. The driver of V1 was killed. The driver of V2 was not reported as injured.
01

PSU09 1995 Case Summary Form
CASE 167A
TYPE OF ACCIDENT: TWO VEHICLE, FATAL

B. VEHICLE PROFILE(S)

Veh. No	Class of Vehicle	Year/Make/ Model	Damage Plane	Severity Descr.	Component Failure
01	Intermediate	1993 Infinity J30 T	Front	Severe	None
02	Subcompact	1988 Hyundai Excel	Back	Severe	L/F Seat Back Folding Locks Failed

01

BEST AVAILABLE COPY

PSU09 1995 Case Summary Form
CASE 167A
TYPE OF ACCIDENT: TWO VEHICLE, FATAL

C. PERSON PROFILE(S)

Veh. No	Person Role	Seat Positon	Restraint Use	Body Region	Injury Type	AIS	Injury Source
01	Driver	L-Front	Air Bag Only	neck	fracture	3	roof
02	Driver	L-Front	None Used	no injuries			

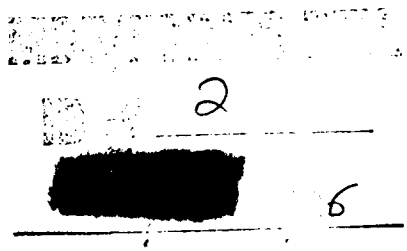

U.S. Department of Transportation

National Highway Traffic Safety Administration

ACCIDENT COLLISION DIAGRAM

NATIONAL ACCIDENT SAMPLING SYSTEM
CRASHWORTHINESS DATA SYSTEM

PSU No. 09 Case Number—Stratum 167A

Indicate North

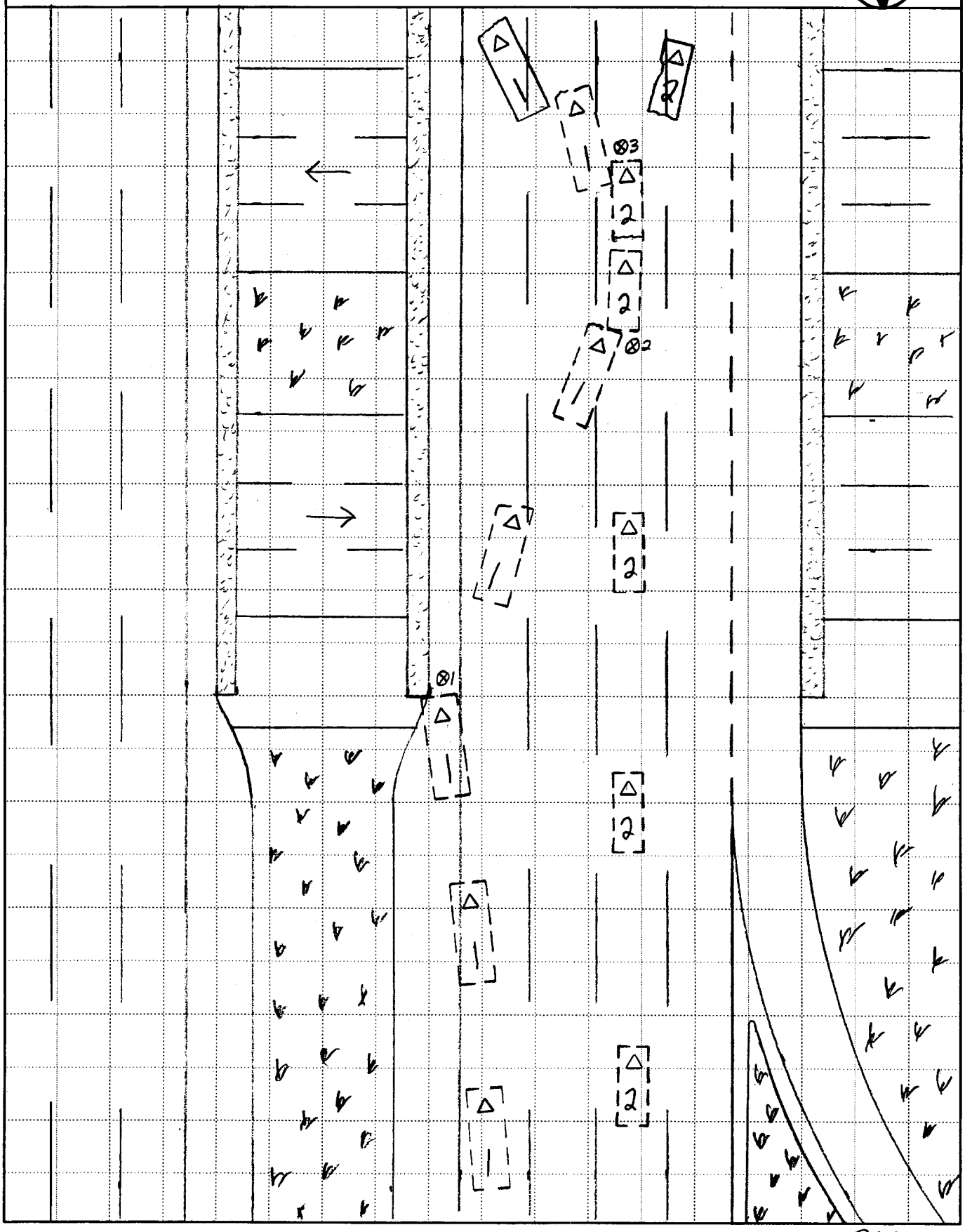

HS Form 431B (1/95)

Scale: 1 centimeter = 250 meters

U.S. Department of Transportation
National Highway Traffic Safety Administration

ACCIDENT COLLISION DIAGRAM

NATIONAL ACCIDENT SAMPLING SYSTEM
CRASHWORTHINESS DATA SYSTEM

PSU No. 09 Case Number—Stratum 16 7A

Indicate North

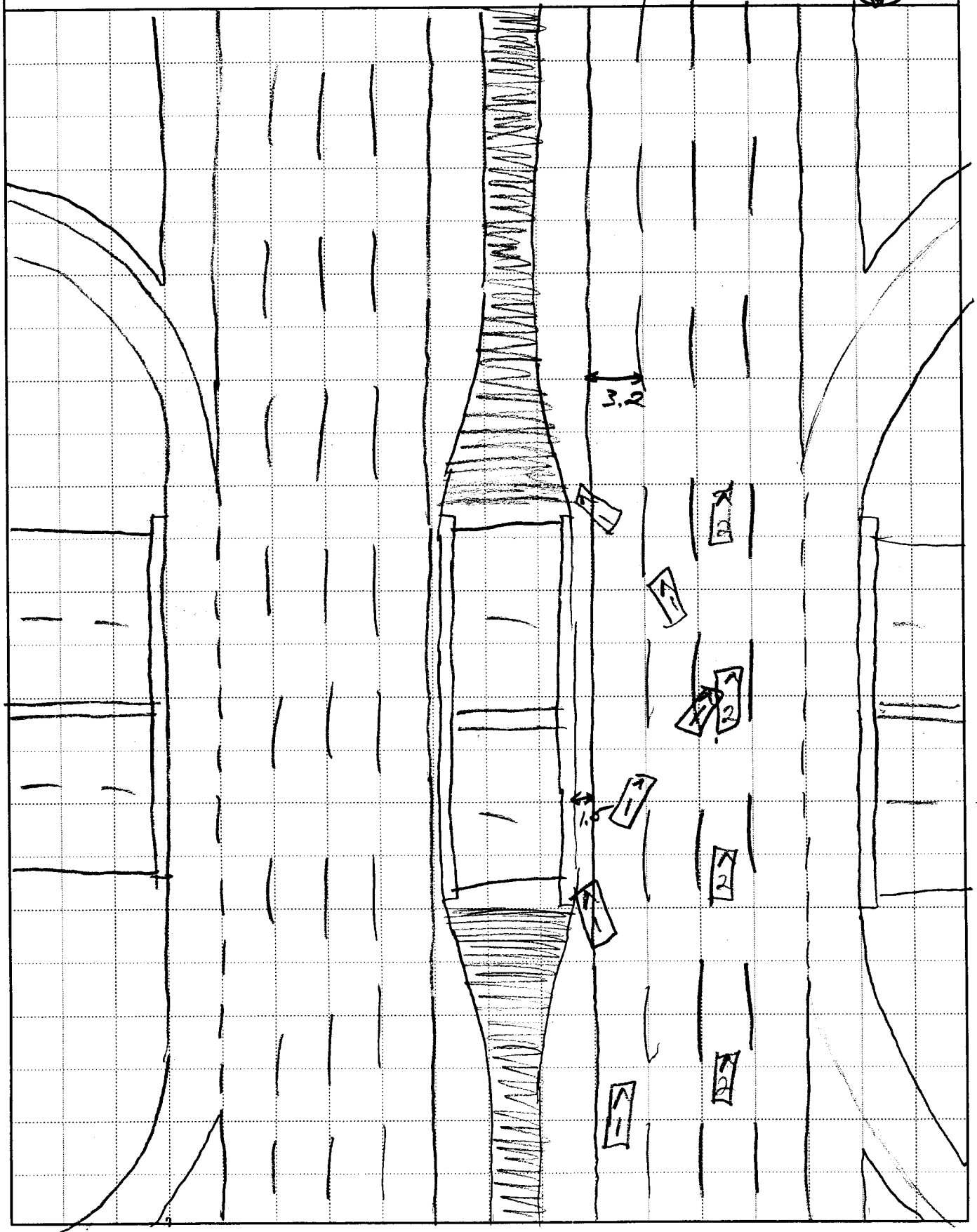

HS Form 431B (1/95)

Scale: 1 centimeter = _____ meters

U.S. Department of Transportation
National Highway Traffic Safety Administration

ACCIDENT COLLISION MEASUREMENT TABLE

NATIONAL ACCIDENT SAMPLING SYSTEM
CRASHWORTHINESS DATA SYSTEM

Primary Sampling Unit Number 09 Case Number—Stratum 1 6 7 A

ACCIDENT COLLISION DIAGRAM

Document the physical plant:

- all road/roadway delineation (e.g., curbs/edge lines, lane markings, median markings, pavement markings, parked vehicles, poles, signs, etc.)
- all traffic controls (e.g., speed limit)
- north arrow placed on diagram
- roadway surface type and condition of applicable roadways
- grade measurements for all applicable roadways and at location of rollover initiation
- roadway curvature

Document vehicle dynamics including:

- reference point and reference line relative to physical features present at the scene
- scaled documentation of all accident induced physical evidence
- scaled documentation of all roadside objects contacted
- scaled representations of the vehicle(s) at pre-impact, impact, and final rest based upon either:
  - a) physical evidence, or
  - b) reconstructed accident dynamics

CRASH DATA

	VEH. #1	VEH. #2	VEH. #3
Heading Angle	998	180°	
Surface Type	bitum	bitum	
Surface Condition	dry	dry	
Coefficient of Friction			
Grade (v/h) Measurement (between impact and final rest)	0/61	0/61	
Grade (v/h) Measurement (at location of rollover initiation) pre-impact	N/A >2%	N/A >2%	

Reference Point: _____ Reference line: _____

Item	Distance and Direction from Reference Point	Distance and Direction from Reference Line
No Physical Evidence - Bridge		
wall & guardrail was completely		
covered with snow		

HS Form 431A (1/95)

Item	Distance and Direction from Reference Point	Distance and Direction from Reference Line

U.S. Department of Transportation
National Highway Traffic Safety Administration

ACCIDENT FORM

NATIONAL ACCIDENT SAMPLING SYSTEM
CRASHWORTHINESS DATA SYSTEM

1. Primary Sampling Unit Number: 09
2. Case Number - Stratum: 167A

IDENTIFICATION

3. Number of General Vehicle Forms Submitted: 02
4. Date of Accident (Month,Day,Year): [redacted] 95
5. Time of Accident: 1750

Code reported military time of accident.

NOTE: Midnight = 2400
Unknown = 9999

SPECIAL STUDIES - INDICATORS

Check (✓) each special study (SS15-SS18 below) that has been completed; code 1 for the checked special studies and 0 for the special studies not checked.

6. ___ SS15 Administrative Use: 0
7. ___ SS16 Pedestrian Crash Data Study: 0
(Data for this special study available in a separate file.)
8. ___ SS17 Impact Fires: 0
9. ___ SS18 Unsafe Driver Actions: 0
10. ___ SS19 _____: 0

NUMBER OF EVENTS

11. Number of Recorded Events in This Accident: 03

Code the number of events which occurred in this accident.

ACCIDENT EVENTS

For each event that occurred in the accident, code the lowest numbered vehicle in the left columns and the other involved vehicle or object in the right columnns.

Accident Event Sequence Number	Vehicle Number	Class Of Vehicle	General Area of Damage	Vehicle Number or Object Contacted	Class Of Vehicle	General Area of Damage
		WB=276				
12. 01	13. 01	14. 03	15. F	16. 54	17. 00	18. 0
					WB=238	
19. 02	20. 01	21. 03	22. F	23. 02	24. 01	25. B
26. 03	27. 01	28. 03	29. R	30. 02	31. 01	32. L
33. 04	34. ___	35. ___	36. ___	37. ___	38. ___	39. ___
40. 05	41. ___	42. ___	43. ___	44. ___	45. ___	46. ___

IF GREATER THAN FIVE EVENTS, CONTINUE CODING ON THE ACCIDENT EVENT SUPPLEMENT

CODES FOR CLASS OF VEHICLE

(00) Not a motor vehicle
(01) Subcompact/mini (wheelbase < 254 cm)
(02) Compact (wheelbase ≥ 254 but < 265 cm)
(03) Intermediate (wheelbase ≥ 265 but < 278 cm)
(04) Full size (wheelbase ≥ 278 but < 291 cm)
(05) Largest (wheelbase ≥ 291 cm)
(09) Unknown passenger car size
(14) Compact utility vehicle
(15) Large utility vehicle (≤ 4,500 kgs GVWR)
(16) Utility station wagon (≤ 4,500 kgs GVWR)
(19) Unknown utility type
(20) Minivan (≤ 4,500 kgs GVWR)
(21) Large van (≤ 4,500 kgs GVWR)
(24) Van Based school bus (≤ 4,500 kgs GVWR)
(28) Other van type (≤ 4,500 kgs GVWR)
(29) Unknown van type (≤ 4,500 kgs GVWR)
(30) Compact pickup truck (≤ 4,500 kgs GVWR)
(31) Large pickup truck (≤ 4,500 kgs GVWR)
(38) Other pickup truck (≤ 4,500 kgs GVWR)
(39) Unknown pickup truck type (≤ 4,500 kgs GVWR
(45) Other light truck (≤ 4,500 kgs GVWR)
(48) Unknown light truck type (≤ 4,500 kgs GVWR)
(49) Unknown light vehicle type
(50) School bus (excludes van based)(> 4,500 kgs GVWR)
(58) Other bus (> 4,500 kgs GVWR)
(59) Unknown bus type
(60) Truck (> 4,500 kgs GVWR)
(67) Tractor without trailer
(68) Tractor-trailer(s)
(78) Unknown medium/heavy truck type
(79) Unknown light/medium/heavy truck type
(80) Motored cycle
(90) Other vehicle
(99) Unknown

CODES FOR GENERAL AREA OF DAMAGE (GAD)

CDS APPLICABLE AND OTHER VEHICLES	(0) Not a motor vehicle (N) Noncollision (F) Front	(R) Right side (L) Left side (B) Back	(T) Top (U) Undercarriage (9) Unknown
TDC APPLICABLE VEHICLES	(0) Not a motor vehicle (N) Noncollision (F) Front (R) Right side	(L) Left side (B) Back of unit with cargo area (rear of trailer or straight truck) (D) Back (rear of tractor)	(C) Rear of cab (V) Front of cargo area (T) Top (U) Undercarriage (9) Unknown

CODES FOR VEHICLE NUMBER OR OBJECT CONTACTED

(01-30) — Vehicle Number

Noncollision
(31) Overturn — rollover (excludes end-over-end)
(32) Rollover — end-over-end
(33) Fire or explosion
(34) Jackknife
(35) Other intraunit damage (specify):
_____
(36) Noncollision injury
(38) Other noncollision (specify):
_____
(39) Noncollision — details unknown

Collision With Fixed Object
(41) Tree (≤ 10 cm in diameter)
(42) Tree (> 10 cm in diameter)
(43) Shrubbery or bush
(44) Embankment
(45) Breakaway pole or post (any diameter)

Nonbreakaway Pole or Post
(50) Pole or post (≤ 10 cm in diameter)
(51) Pole or post (> 10 cm but ≤ 30 cm in diameter)
(52) Pole or post (> 30 cm in diameter)
(53) Pole or post (diameter unknown)

(54) Concrete traffic barrier
(55) Impact attenuator
(56) Other traffic barrier (includes guardrail) (specify):_____
(57) Fence
(58) Wall
(59) Building
(60) Ditch or culvert
(61) Ground
(62) Fire hydrant
(63) Curb
(64) Bridge
(68) Other fixed object (specify):
_____
(69) Unknown fixed object

Collision with Nonfixed Object
(70) Passenger car, light truck, van, or other vehicle not in-transport
(71) Medium/heavy truck or bus not in-transport
(72) Pedestrian
(73) Cyclist or cycle
(74) Other nonmotorist or conveyance
_____
(75) Vehicle occupant
(76) Animal
(77) Train
(78) Trailer, disconnected in transport
(79) Object fell from vehicle in-transport
(88) Other nonfixed object (specify):
_____
(89) Unknown nonfixed object

(98) Other event (specify):
_____
(99) Unknown event or object

PRECRASH ENVIRONMENTAL DATA

19. Relation To Interchange Or Junction — 1
    (0) Non-interchange area and non-junction
    (1) Interchange area related

    Non-Interchange junctions
    (2) Intersection related
    (3) Driveway, alley access related
    (4) Other junction (specify) _____
    (5) Unknown type of junction

    (9) Unknown

20. Trafficway Flow — 2
    (0) Not physically divided (two way traffic)
    (1) Divided trafficway-median strip without positive barrier
    (2) Divided trafficway-median strip with positive barrier
    (3) One way traffic
    (9) Unknown

21. Number Of Travel Lanes — 5
    (1) One
    (2) Two
    (3) Three
    (4) Four
    (5) Five
    (6) Six
    (7) Seven or more
    (9) Unknown

22. Roadway Alignment — 1
    (1) Straight
    (2) Curve right
    (3) Curve left
    (9) Unknown

23. Roadway Profile — 2
    (1) Level
    (2) Uphill grade (>2%)
    (3) Hill crest
    (4) Downhill grade (>2%)
    (5) Sag
    (9) Unknown

24. Roadway Surface Type — 2
    (1) Concrete
    (2) Bituminous (asphalt)
    (3) Brick or block
    (4) Slag, gravel, or stone
    (5) Dirt
    (8) Other (specify): _____
    (9) Unknown

25. Roadway Surface Condition — 1
    (1) Dry
    (2) Wet
    (3) Snow or slush
    (4) Ice
    (5) Sand, dirt, or oil
    (8) Other (specify): _____
    (9) Unknown

26. Light Conditions — 3
    (1) Daylight
    (2) Dark
    (3) Dark, but lighted
    (4) Dawn
    (5) Dusk
    (9) Unknown

27. Atmospheric Conditions — 0
    (0) No adverse atmospheric-related driving conditions
    (1) Rain
    (2) Sleet/hail
    (3) Snow
    (4) Fog
    (5) Rain and fog
    (6) Sleet and fog
    (7) Other (e.g., smog, smoke, blowing sand or dust, etc.) (specify): _____
    (9) Unknown

28. Traffic Control Device — 0
    (0) No traffic control(s)
    (1) Traffic control signal (not RR crossing)

    Regulatory
    (2) Stop sign
    (3) Yield sign
    (4) School zone sign
    (5) Other regulatory sign (specify): _____
    (6) Warning sign (not RR crossing)
    (7) Unknown sign
    (8) Miscellaneous/other controls including RR controls (specify): _____
    (9) Unknown

29. Traffic Control Device Functioning — 0
    (0) No traffic control device
    (1) Traffic control device not functioning (specify): _____
    (2) Traffic control device functioning properly
    (9) Unknown

OCCUPANT RELATED

37. Driver Presence in Vehicle: 1
(0) Driver not present
(1) Driver present
(9) Unknown

38. Number of Occupants This Vehicle: 01
(00-96) Code actual number of occupants for this vehicle
(97) 97 or more
(99) Unknown

39. Number of Occupant Forms Submitted: 01

AIR BAG RELATED

40. Is this an AOPS Vehicle? 1
(0) No (includes unknown)
(1) Yes - researcher determined
(2) VIN determined air bag system
(3) VIN determined automatic (passive) belts
(4) VIN determined air bag and automatic (passive) belts

41. Air Bag(s) Deployment, First Seat Frontal: 6
(0) Not equipped or not available
(1) No air bags deployed

Single Air Bag Vehicle
(2) Driver air bag deployed
(3) Driver air bag, unknown if deployed

Multiple Air Bag Vehicle
(4) Driver side only deployed
(5) Passenger side only deployed
(6) Driver and passenger side deployed
(7) Driver and passenger side unknown if deployed
(8) Air bag(s) deployed, details unknown
(9) Unknown

42. Air Bag(s) Deployment, Other Than First Seat Frontal: 0
(0) Not equipped with an "other" air bag
(1) Deployed during accident (as a result of impact)
(2) Deployed inadvertently just prior to accident
(3) Deployed, details unknown
(4) Deployed as a result of a noncollision event during accident sequence (e.g., fire, explosion, electrical)
(5) Unknown if deployed
(7) Nondeployed
(9) Unknown

Specify type of "other" air bag present: _____

VEHICLE WEIGHT ITEMS

43. Vehicle Curb Weight: 1,600 0
____ Code weight to nearest 10 kilograms.
(045) Less than 450 kilograms
(610) 6,100 kilograms or more
(999) Unknown
3,527 lbs X .4536 = 1600 kgs
Source: [redacted]

44. Vehicle Cargo Weight: 0,000 0
____ Code weight to nearest 10 kilograms.
(000) Less than 5 kilograms
(450) 4,500 kilograms or more
(999) Unknown
__,___ lbs X .4536 = __,___ kgs
Source: [redacted]

ROLLOVER DATA

45. Rollover: 00
(00) No rollover (no overturning)

Rollover (primarily about the longitudinal axis)
(01-16) Code the number of quarter turns
(17) Rollover, 17 or more quarter turns (specify): _____
(98) Rollover--end-over-end (i.e., primarily about the lateral axis)
(99) Rollover (overturn), details unknown

46. Rollover Initiation Type: 00
(00) No rollover
(01) Trip-over
(02) Flip-over
(03) Turn-over
(04) Climb-over
(05) Fall-over
(06) Bounce-over
(07) Collision with another vehicle
(08) Other rollover initiation type specify): _____
(98) Rollover--end-over-end
(99) Unknown rollover initiation type

47. Location of Rollover Initiation: 0
(0) No rollover
(1) On roadway
(2) On shoulder—paved
(3) On shoulder—unpaved
(4) On roadside or divided trafficway median
(8) Rollover--end-over-end
(9) Unknown

48. Rollover Initiation Object Contacted: 00
(Note: Applicable codes on back of page)

49. Location on Vehicle Where Initial Principal Tripping Force Is Applied: 0
(0) No rollover
(1) Wheels/tires
(2) Side plane
(3) End plane
(4) Undercarriage
(5) Other location on vehicle (specify): _____
(6) Non-contact rollover forces (specify): _____
(8) Rollover--end-over-end
(9) Unknown

50. Direction of Initial Roll: 0
(0) No rollover
(1) Roll right - primarily about the longitudinal axis
(2) Roll left - primarily about the longitudinal axis
(8) Rollover--end-over-end
(9) Unknown roll direction

CODES FOR ROLLOVER INITIATION OBJECT CONTACTED

(00) No rollover
(01-30) — Vehicle Number

Noncollision
(31) Turn-over — fall-over
(32) No rollover impact initiation (end-over-end)
(34) Jackknife

Collision With Fixed Object
(41) Tree (≤ 10 cm in diameter)
(42) Tree (> 10 cm in diameter)
(43) Shrubbery or bush
(44) Embankment

(45) Breakaway pole or post (any diameter)

Nonbreakaway Pole or Post
(50) Pole or post (≤ 10 cm in diameter)
(51) Pole or post (> 10 cm but ≤ 30 cm in diameter)
(52) Pole or post (> 30 cm in diameter)
(53) Pole or post (diameter unknown)

(54) Concrete traffic barrier
(55) Impact attenuator
(56) Other traffic barrier (includes guardrail) (specify):_____

(57) Fence
(58) Wall
(59) Building
(60) Ditch or culvert
(61) Ground
(62) Fire hydrant
(63) Curb
(64) Bridge
(68) Other fixed object (specify):

(69) Unknown fixed object

Collision with Nonfixed Object
(70) Passenger car, light truck, van, or other vehicle not in-transport
(71) Medium/heavy truck or bus not in-transport
(76) Animal
(77) Train
(78) Trailer, disconnected in transport
(79) Object fell from vehicle in-transport
(88) Other nonfixed object (specify):

(89) Unknown nonfixed object

(98) Other event (specify):

(99) Unknown event or object

U.S. Department of Transportation
National Highway Traffic Safety Administration

EXTERIOR VEHICLE FORM

NATIONAL ACCIDENT SAMPLING SYSTEM
CRASHWORTHINESS DATA SYSTEM

1. Primary Sampling Unit Number: 09
2. Case Number - Stratum: 167A
3. Vehicle Number: 01

VEHICLE IDENTIFICATION

VIN JNKAY21DXPM[redacted] Model Year 93

Vehicle Make (specify): Infinity Vehicle Model (specify): J30T

LOCATOR

Locate the end of the damage with respect to the vehicle longitudinal center line or bumper corner for end impacts or an undamaged axle for side impacts.

Specific Impact No.	Location of Direct Damage	Location of Field L	Location of Max Crush
01	Starts L/F corner to right		
02	Starts R/F corner to left		

CRUSH PROFILE IN CENTIMETERS

NOTES: Identify the plane at which the C-measurements are taken (e.g., at bumper, above bumper, at sill, above sill, etc.) and label adjustments (e.g., free space).

Measure C1 to C6 from driver to passenger side in front or rear impacts and rear to front in side impacts.

Free space value is defined as the distance between the baseline and the original body contour taken at the individual C locations. This may include the following: bumper lead, bumper taper, side protrusion, side taper, etc. Record the value for each C-measurement and maximum crush.

Use as many lines/columns as necessary to describe each damage profile.

Specific Impact Number	Plane of Impact C-Measurements	Direct Damage		Field L	C_1	C_2	C_3	C_4	C_5	C_6	±D
		Width (CDC)	Max Crush								
01	CDC Only										
02	CDC Only										
03	CDC Only										
	Note: This car was picked during the 96 blizzard.										
	Very high snow + positioning of vehicle up										
	against other vehicles prevented me from										
	obtaining C measurements.										

ORIGINAL SPECIFICATIONS WORK SHEET

Wheelbase	108.7	inches	x 2.54	=	276 cm
Overall Length	191.3	inches	x 2.54	=	486 cm
Maximum Width	69.7	inches	x 2.54	=	177 cm
Curb Weight	3,527	pounds	x .4536	=	1,600 kg
Average Track	59.1	inches	x 2.54	=	150 cm
Front Overhang	___.__	inches	x 2.54	=	___ cm
Rear Overhang	___.__	inches	x 2.54	=	___ cm
Undeformed End Width	___.__	inches	x 2.54	=	___ cm
Engine Size: cyl./displ.	____	cc	x .001	=	3.0 L
	___	CID	x .0164	=	__.__ L

VEHICLE DAMAGE SKETCH

TIRE–WHEEL DAMAGE

	a. Rotation physically restricted	b. Tire deflated
RF	1	1
LF	1	1
RR	2	2
LR	2	1

(1) Yes (2) No (8) NA (9) Unk.

TYPE OF TRANSMISSION

☐ Manual ☒ Automatic

END SHIFT ≥ 10 CM
☐ Yes ☒ No

ORIGINAL SPECIFICATIONS

Wheelbase	276	cm
Overall Length	486	cm
Maximum Width	177	cm
Curb Weight	1,600	kg
Average Track	150	cm
Front Overhang		cm
Rear Overhang		cm
Undeformed End Width	140	cm
Engine Size: cyl./displ.	3.0	L

WHEEL STEER ANGLES

(For locked front wheels or displaced rear axles only)

RF ± 0 0 °
LF ± 0 0 °
RR ± X X °
LR ± X X °

Within ± 5 degrees

DRIVE WHEELS

☒ FWD ☐ RWD ☐ 4WD

Approximate Cargo Weight 0 kg

MEASUREMENTS IN CENTIMETERS

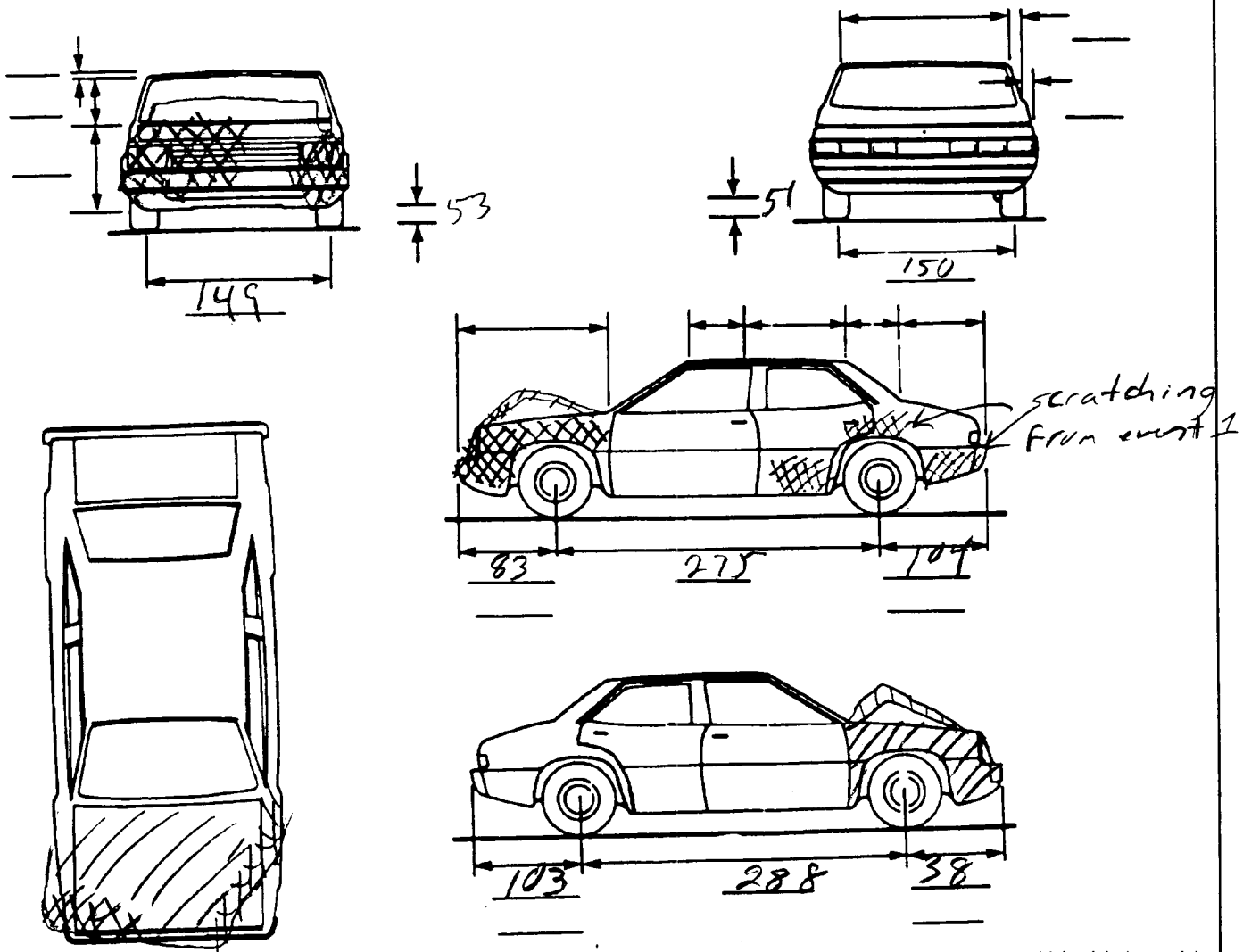

NOTES: Sketch new perimeter and cross hatch direct damage and single hatch induced damage on all views. Annotate observations which might be useful in reconstructing the accident (e.g., grass in tire bead, direction of striations, scuff on sidewalls, etc.). If pulling trailer, sketch type of trailer and damage received on the back of this page.

Annotate any damage caused by extrication such as component removal by torching, prying, or hydraulic shears.

CDC WORKSHEET

CODES FOR OBJECT CONTACTED

(01-30) — Vehicle Number

Noncollision
- (31) Overturn — rollover (excludes end-over-end)
- (32) Rollover—end-over-end
- (33) Fire or explosion
- (34) Jackknife
- (35) Other intraunit damage (specify): _____
- (36) Noncollision injury
- (38) Other noncollision (specify): _____
- (39) Noncollision — details unknown

Collision With Fixed Object
- (41) Tree (≤ 10 cm in diameter)
- (42) Tree (> 10 cm in diameter)
- (43) Shrubbery or bush
- (44) Embankment
- (45) Breakaway pole or post (any diameter)

Nonbreakaway Pole or Post
- (50) Pole or post (≤ 10 cm in diameter)
- (51) Pole or post (> 10 cm but ≤ 30 cm in diameter)
- (52) Pole or post (> 30 cm in diameter)
- (53) Pole or post (diameter unknown)
- (54) Concrete traffic barrier
- (55) Impact attenuator
- (56) Other traffic barrier (includes guardrail) (specify): _____
- (57) Fence
- (58) Wall
- (59) Building
- (60) Ditch or culvert
- (61) Ground
- (62) Fire hydrant
- (63) Curb
- (64) Bridge
- (68) Other fixed object (specify): _____
- (69) Unknown fixed object

Collision with Nonfixed Object
- (70) Passenger car, light truck, van, or other vehicle not in-transport
- (71) Medium/heavy truck or bus not in-transport
- (72) Pedestrian
- (73) Cyclist or cycle
- (74) Other nonmotorist or conveyance _____
- (75) Vehicle occupant
- (76) Animal
- (77) Train
- (78) Trailer, disconnected in transport
- (79) Object fell from vehicle in-transport
- (88) Other nonfixed object (specify): _____
- (89) Unknown nonfixed object
- (98) Other event (specify): _____
- (99) Unknown event or object

DEFORMATION CLASSIFICATION BY EVENT NUMBER

Accident Event Sequence Number	Object Contacted	(1) (2) Direction of Force (degrees)	Incremental Value of Shift	(3) Deformation Location	(4) Specific Longitudinal or Lateral Location	(5) Specific Vertical or Lateral Location	(6) Type of Damage Distribution	(7) Deformation Extent
01	54	000	00	F	L	E	~~N~~E	~~03~~ 05
02	02	030	00	F	Z	E	W	01
03	02	997	99	9	9	9	9	99

Looks like (from V2) move a 12 o'clock. Cannot get a good PDOF from slides - cannot verify Z, W either.

COLLISION DEFORMATION CLASSIFICATION

HIGHEST DELTA "V"

Accident Event Sequence Number	Object Contacted	(1) (2) Direction of Force	(3) Deformation Location	(4) Longitudinal or Lateral Location	(5) Vertical or Lateral Location	(6) Type of Damage Distribution	(7) Deformation Extent
4. 01	5. 54	6. 12	7. F	8. L	9. E	10. ~~A~~ E	11. ~~03~~ 05

Second Highest Delta "V"

12. 02	13. 02	14. ~~01~~ 99	15. ~~F~~ 9	16. 2 9	17. E 9	18. W ~~9~~	19. 01 99

CRUSH PROFILE IN CENTIMETERS

The crush profile for the damage described in the CDC(s) above should be documented in the appropriate space below. (ALL MEASUREMENTS ARE IN CENTIMETERS.)

HIGHEST DELTA "V"

20. L	21. C_1	C_2	C_3	C_4	C_5	C_6	22. ±D
							+ −

Second Highest Delta "V"

23. L	24. C_1	C_2	C_3	C_4	C_5	C_6	25. ±D
							+ −

26. Undeformed End Width (Coded when highest severity impact is an end plane impact.) 140
____ Code to the nearest centimeter
(250) 250 centimeters or more
(998) No highest severity end plane impact
(999) Unknown

27. Direct Damage Width (For highest severity impact) 030
Unsure how it arrived at this
____ Code to the nearest centimeter
(250) 250 centimeters or more
(999) Unknown

28. Original Wheelbase 276
____ Code to the nearest centimeter
(650) 650 centimeters or more
(999) Unknown
108.7 inches X 2.54 = 276 centimeters

29. Original Average Track Width 150
____ Code to the nearest centimter
(185) 185 centimeters or more
(999) Unknown
59.1 inches X 2.54 = 150 centimeters

30. Are CDCs Documented but Not Coded on The Automated File? 0
(0) No
(1) Yes

31. Researcher's Assessment of Vehicle Disposition 1
(0) Not towed due to vehicle damage
(1) Towed due to vehicle damage
(9) Unknown

32. Is This A Multi-Stage Manufactured Vehicle And/Or A Certified Altered Vehicle? 0
(0) No post manufacturer modifications
(1) Yes - post manufacturer modifications (specify): _____
_____
_____
(Include photograph of CERTIFICATION PLACARD in case report)
(9) Unknown if vehicle is modified

FIRE OCCURRENCE

33. Fire Occurrence 0
(0) No fire

Yes, fire occurred
(1) Minor
(2) Major
(9) Unknown

34. Origin of Fire 0
(0) No fire
(1) Vehicle exterior (front, side, back, top)
(2) Exhaust system
(3) Fuel tank (and other fuel retention system parts)
(4) Engine compartment
(5) Cargo/trunk compartment
(6) Instrument panel
(7) Passenger compartment area
(8) Other location (specify):
_____
(9) Unknown

FUEL SYSTEM

35. Location of Fuel Tank-1 Filler Cap 3
36. Location of Fuel Tank-2 Filler Cap 0
(0) No fuel tank
(1) On back plane
(2) Aft of center of the rear wheels (rear axle) on left side plane
(3) Aft of center of the rear wheels (rear axle) on right side plane
(4) Forward of center of the rear wheels (rear axle) on left side plane
(5) Forward of center of the rear wheels (rear axle) on right side plane
(6) Over the center of the rear wheels (rear axle) on left side plane
(7) Over the center of the rear wheels (rear axle) on right side plane
(8) Other (specify):_____
(9) Unknown

37. Type of Fuel Tank-1 9
38. Type of Fuel Tank-2 0
(0) No fuel tank (electrical vehicle)
(1) Metallic
(2) Non-metallic
(9) Unknown

39. Location of Fuel Tank-1 9
40. Location of Fuel Tank-2 0
(0) No fuel tank
(1) Aft of center of the rear wheels (rear axle) centered
(2) Aft of center of the rear wheels (rear axle) left side
(3) Aft of center of the rear wheels (rear axle) right side
(4) Forward of center of the rear wheels (rear axle) centered
(5) Forward of center of the rear wheels (rear axle) left side
(6) Forward of center of the rear wheels (rear axle) right side
(7) Over center of the rear wheels (rear axle)
(8) Other (specify):_____
(9) Unknown

41. Damage to Fuel Tank-1 9
42. Damage to Fuel Tank-2 0
(0) No fuel tank
(1) No damage to fuel tank
(2) Deformed, no seam failure
(3) Deformed, with a seam failure
(4) Punctured
(5) Lacerated (ripped)
(6) Abraded (scraped)
(7) Filler neck separation from the fuel tank
(8) Other damage (specify):_____
(9) Unknown

43. Leakage Location of Fuel System-1 9

44. Leakage Location of Fuel System-2 0
(0) No fuel tank
(1) No fuel leakage

Primary Area Of Leakage
(2) Tank
(3) Filler neck
(4) Cap
(5) Lines/pump/filter
(6) Vent/emission recovery
(8) Other (specify):_____
(9) Unknown

45. Fuel Type-1 01

46. Fuel Type-2 00

Single Fuel Type
(00) No fuel tank
(01) Gasoline
(02) Diesel
(03) CNG (Compressed Natural Gas)
(04) LPG (Liquid Petroleum Gas) also known as Propane
(05) LNG (Liquid Natural Gas)
(06) Methanol (M100 or M85)
(07) Ethanol (E100 or E85)
(08) Other (Hydrogen or others) (specify):
_____

Electric Powered or Electric/Solar Powered Vehicles
(10) Lead Acid Battery
(11) Nickel-Iron Battery
(12) Nickel-Cadmium Battery
(13) Sodium Metal Chloride Battery
(14) Sodium Sulfur Battery
(18) Other (Specify):_____

(98) Other Hybrid (specify):
_____

(99) Unknown fuel type

47. Is This Vehicle Equipped With More Than Two Fuel Tanks? 0
(0) No (one or two tanks only)

Yes - More Than Two Tanks
(1) Yes -- no damage to any tank or filler cap and no fuel system leakage
(2) Yes -- no damage to any tank or filler cap but there is fuel system leakage (specify leakage location):
_____
(3) Yes -- damage to an additional tank or filler cap and there is fuel system leakage (specify the following):
Type of tank _____
Tank location _____
Filler cap location _____
Tank damage _____
Location of leakage _____
Type of fuel _____
(9) Unknown if more than two tanks

COMMENTS

Note: Very high snow around and under car prevented me from getting a look at the gas tank.

*** STOP: IF THE CDS APPLICABLE VEHICLE WAS NOT TOWED ***

(GV10=0)

DO NOT COMPLETE THE INTERIOR VEHICLE FORM.

U.S. Department of Transportation
National Highway Traffic Safety Administration

INTERIOR VEHICLE FORM

NATIONAL ACCIDENT SAMPLING SYSTEM
CRASHWORTHINESS DATA SYSTEM

1. Primary Sampling Unit Number: 09
2. Case Number - Stratum: 167A
3. Vehicle Number: 01

INTEGRITY

4. Passenger Compartment Integrity: 00

(00) No integrity loss

Yes, Integrity Was Lost Through
(01) Windshield
(02) Door (side)
(03) Door/hatch (back door)
(04) Roof
(05) Roof glass
(06) Side window
(07) Rear window (backlight)
(08) Roof and roof glass
(09) Windshield and door (side)
(10) Windshield and roof
(11) Side and rear window (side window and backlight)
(12) Windshield and side window
(13) Door and side window
(98) Other combination of above (specify): _____
(99) Unknown

Door, Tailgate or Hatch Opening

5. LF 1 6. RF 1 7. LR 1 8. RR 1 9. TG/H 0

(0) No door/gate/hatch
(1) Door/gate/hatch remained closed and operational
(2) Door/gate/hatch came open during collision
(3) Door/gate/hatch jammed shut
(8) Other (specify): _____
(9) Unknown

Damage/Failure Associated with Door, Tailgate or Hatch Opening in Collision. If IV05-IV09 ≠ 2, Then code Ø

10. LF 0 11. RF 0 12. LR 0 13. RR 0 14. TG/H 0

(0) No door/gate/hatch or door not opened

Door, Tailgate or Hatch Came Open During Collision
(1) Door operational (no damage)
(2) Latch/striker failure due to damage
(3) Hinge failure due to damage
(4) Door structure failure due to damage
(5) Door support (i.e., pillar, sill, roof side rail, etc.) failure due to damage
(6) Latch/striker and hinge failure due to damage
(8) Other failure (specify): _____
(9) Unknown

GLAZING

Type of Window/Windshield Glazing

15. WS 1 16. LF 2 17. RF 2 18. LR 2 19. RR 2
20. BL 2 21. Roof 3 22. Other 0

(0) No glazing
(1) AS-1 — Laminated
(2) AS-2 — Tempered
(3) AS-3 — Tempered-tinted (original)
(4) AS-2 — Tempered-with after market tint
(5) AS-3 — Tempered-tinted (with additional after market tint)
(6) AS-14 — Glass/Plastic
(7) Glazing removed prior to accident
(8) Other (specify): _____
(9) Unknown

Window Precrash Glazing Status

23. WS 1 24. LF 2 25. RF 2 26. LR 2 27. RR 2
28. BL 1 29. Roof 3 30. Other 0

(0) No glazing
(1) Fixed
(2) Closed
(3) Partially opened
(4) Fully opened
(7) Glazing removed prior to accident
(9) Unknown

Glazing Damage from Impact Forces

31. WS 2 32. LF 1 33. RF 1 34. LR 1 35. RR 1
36. BL 1 37. Roof 1 38. Other 0

(0) No glazing
(1) No glazing damage from impact forces
(2) Glazing in place and cracked from impact forces
(3) Glazing in place and holed from impact forces
(4) Glazing out-of-place (cracked or not) and not holed from impact forces
(5) Glazing out-of-place and holed from impact forces
(6) Glazing disintegrated from impact forces
(7) Glazing removed prior to accident
(9) Unknown if damaged

Glazing Damage from Occupant Contact

39. WS 1 40. LF 2 41. RF 1 42. LR 1 43. RR 1
44. BL 1 45. Roof 1 46. Other 0

(0) No glazing
(1) No occupant contact to glazing
(2) Glazing contacted by occupant but no glazing damage
(3) Glazing in place and cracked by occupant contact
(4) Glazing in place and holed by occupant contact
(5) Glazing out-of-place (cracked or not) by occupant contact and not holed by occupant contact
(6) Glazing out-of-place by occupant contact and holed by occupant contact
(7) Glazing removed prior to accident
(8) Glazing disintegrated by occupant contact
(9) Unknown if contacted by occupant

INTRUSION WORKSHEET

Note: Sketch intruded areas

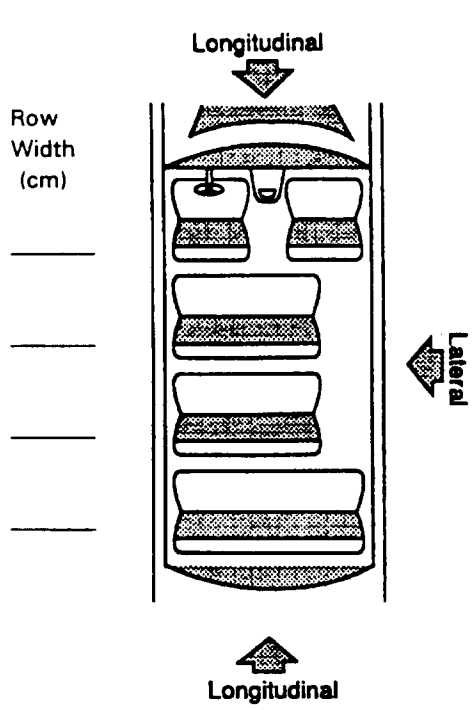

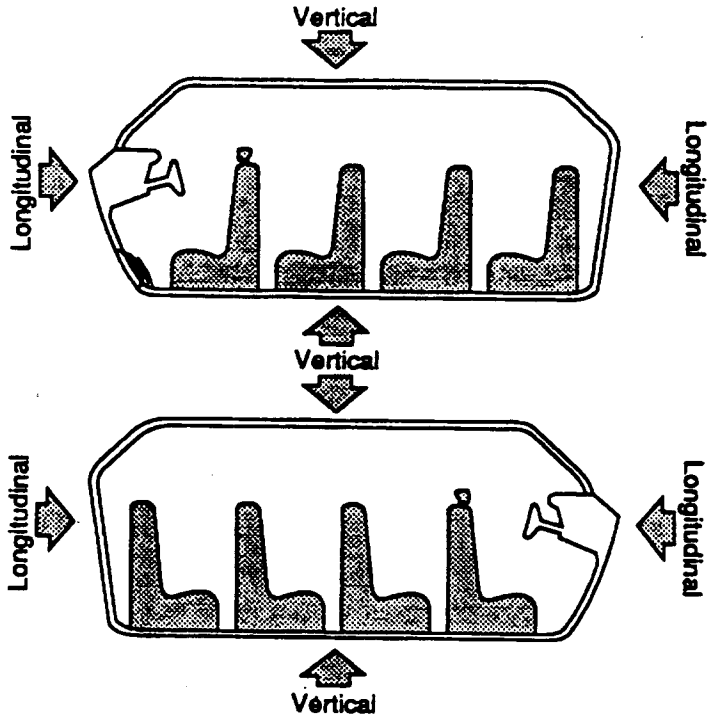

LOCATION OF INTRUSION	INTRUDED COMPONENT	(All Measurements Are In Centimeters) COMPARISON VALUE	–	INTRUDED VALUE	=	INTRUSION	DOMINANT CRUSH DIRECTION
11	05	68	–	63	=	5	2
			–		=		
			–		=		
			–		=		
			–		=		
			–		=		
			–		=		
			–		=		
			–		=		
			–		=		
			–		=		
			–		=		
			–		=		
			–		=		
			–		=		
			–		=		

Document no more than the 15 most severe intrusions

OCCUPANT AREA INTRUSION

Note: If no intrusions, leave variables IV47-IV86 blank.

	Location of Intrusion	Intruding Component	Magnitude of Intrusion	Dominant Crush Direction
1st	47. 1 1	48. 05	49. 1	50. 2
2nd	51.	52.	53.	54.
3rd	55.	56.	57.	58.
4th	59.	60.	61.	62.
5th	63.	64.	65.	66.
6th	67.	68.	69.	70.
7th	71.	72.	73.	74.
8th	75.	76.	77.	78.
9th	79.	80.	81.	82.
10th	83.	84.	85.	86.

LOCATION OF INTRUSION

Front Seat
- (11) Left
- (12) Middle
- (13) Right

Second Seat
- (21) Left
- (22) Middle
- (23) Right

Third Seat
- (31) Left
- (32) Middle
- (33) Right

Fourth Seat
- (41) Left
- (42) Middle
- (43) Right

- (97) Catastrophic
- (98) Other enclosed area (specify) _____
- (99) Unknown

INTRUDING COMPONENT

Interior Components
- (01) Steering assembly
- (02) Instrument panel left
- (03) Instrument panel center
- (04) Instrument panel right
- (05) Toe pan
- (06) A (A1/A2)-pillar
- (07) B-pillar
- (08) C-pillar
- (09) D-pillar
- (10) Side panel - forward of the A1/A2-pillar
- (11) Door panel (side)
- (12) Side panel - rear of the B-pillar
- (13) Roof (or convertible top)
- (14) Roof side rail
- (15) Windshield
- (16) Windshield header
- (17) Window frame
- (18) Floor pan (includes sill)
- (19) Backlight header
- (20) Front seat back
- (21) Second seat back
- (22) Third seat back
- (23) Fourth seat back
- (24) Fifth seat back
- (25) Seat cushion
- (26) Back door/panel (e.g., tailgate)
- (27) Other interior component (specify): _____

Exterior Components
- (30) Hood
- (31) Outside surface of this vehicle (specify): _____
- (32) Other exterior object in the environment (specify): _____
- (33) Unknown exterior object
- (97) Catastrophic
- (98) Intrusion of unlisted component(s) (specify): _____
- (99) Unknown

MAGNITUDE OF INTRUSION

- (1) ≥ 3 centimeters but < 8 centimeters
- (2) ≥ 8 centimeters but < 15 centimeters
- (3) ≥ 15 centimeters but < 30 centimeters
- (4) ≥ 30 centimeters but < 46 centimeters
- (5) ≥ 46 centimeters but < 61 centimeters
- (6) ≥ 61 centimeters
- (7) Catastrophic
- (9) Unknown

DOMINANT CRUSH DIRECTION

- (1) Vertical
- (2) Longitudinal
- (3) Lateral
- (7) Catastrophic
- (9) Unknown

STEERING RIM/SPOKE DEFORMATION

(All Measurements Are in Centimeters)

COMPARISON VALUE	—	DAMAGE VALUE	=	DEFORMATION
	—		=	
	—		=	
	—		=	
	—		=	

STEERING COLUMN

87. Steering Column Type 2
(1) Fixed column
(2) Tilt column
(3) Telescoping column
(4) Tilt and telescoping column
(8) Other column type (specify): _____
(9) Unknown

88. Tilt Steering Column Adjustment 5
(0) No tilt steering column
(1) Full up
(2) Between full up and center
(3) Center
(4) Between center and full down
(5) Full down
(9) Unknown

89. Telescoping Steering Column Adjustment 0
(0) No telescoping steering column
(1) Full back
(2) Between full back and midpoint
(3) Midpoint
(4) Between midpoint and full forward
(5) Full forward
(9) Unknown

90. Steering Rim/Spoke Deformation 00
____Code actual measured deformation to the nearest centimeter
(00) No steering rim deformation
(01-14) Actual measured value in centimeters
(15) 15 centimeters or more
(98) Observed deformation cannot be measured
(99) Unknown

91. Location of Steering Rim/Spoke Deformation 00
(00) No steering rim deformation

Quarter Sections
(01) Section A
(02) Section B
(03) Section C
(04) Section D

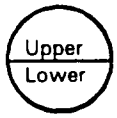

Half Sections
(05) Upper half of rim/spoke
(06) Lower half of rim/spoke
(07) Left half of rim/spoke
(08) Right half of rim/spoke

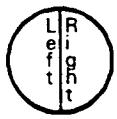

(09) Complete steering wheel collapse
(10) Undetermined location
(99) Unknown

INSTRUMENT PANEL

92. Odometer Reading 103,000
____ kilometers
Code to the nearest 1,000 kilometers
(000) No odometer
(001) Less than 1,500 kilometers
(500) 499,500 kilometers or more
(999) Unknown
63,692 miles X 1.6093 = 102,500 kilometers
Source: [redacted]

93. Instrument Panel Damage from Occupant Contact? 0
(0) No
(1) Yes
(9) Unknown

94. Type of Knee Bolster Covering 2
(0) No knee bolster
(1) Padded
(2) Rigid plastic
(8) Other (specify): _____
(9) Unknown

95. Knee Bolsters Deformed from Occupant Contact? 1
(0) No knee bolster
(1) No deformation
(2) Yes - deformation
(9) Unknown

96. Did Glove Compartment Door Open During Collision(s)? 2
(0) No glove compartment door
(1) No - door did not open
(2) Yes - door opened
(9) Unknown

97. Adaptive (Assistive) Driving Equipment 0
(0) No adaptive driving equipment
(1) Adaptive driving equipment installed
(Check all that apply.)
[ ] Hand controls for braking/acceleration
[ ] Steering control devices (attached to OEM steering wheel
[ ] Steering knob attached to steering wheel
[ ] Low effort power steering (unit or device)
[ ] Replacement steering wheel (i.e., reduced diameter)
[ ] Joy-stick steering controls
[ ] Wheelchair tie-downs
[ ] Modification to seat belts (specify): _____
[ ] Additional or relocated switches (specify): _____
[ ] Raised roof
[ ] Wall-mounted head rest (used behind wheelchair)
[ ] Other adaptive device (specify): _____
(9) Unknown

VEHICLE INTERIOR SKETCHES

Note area of ejection/entrapment

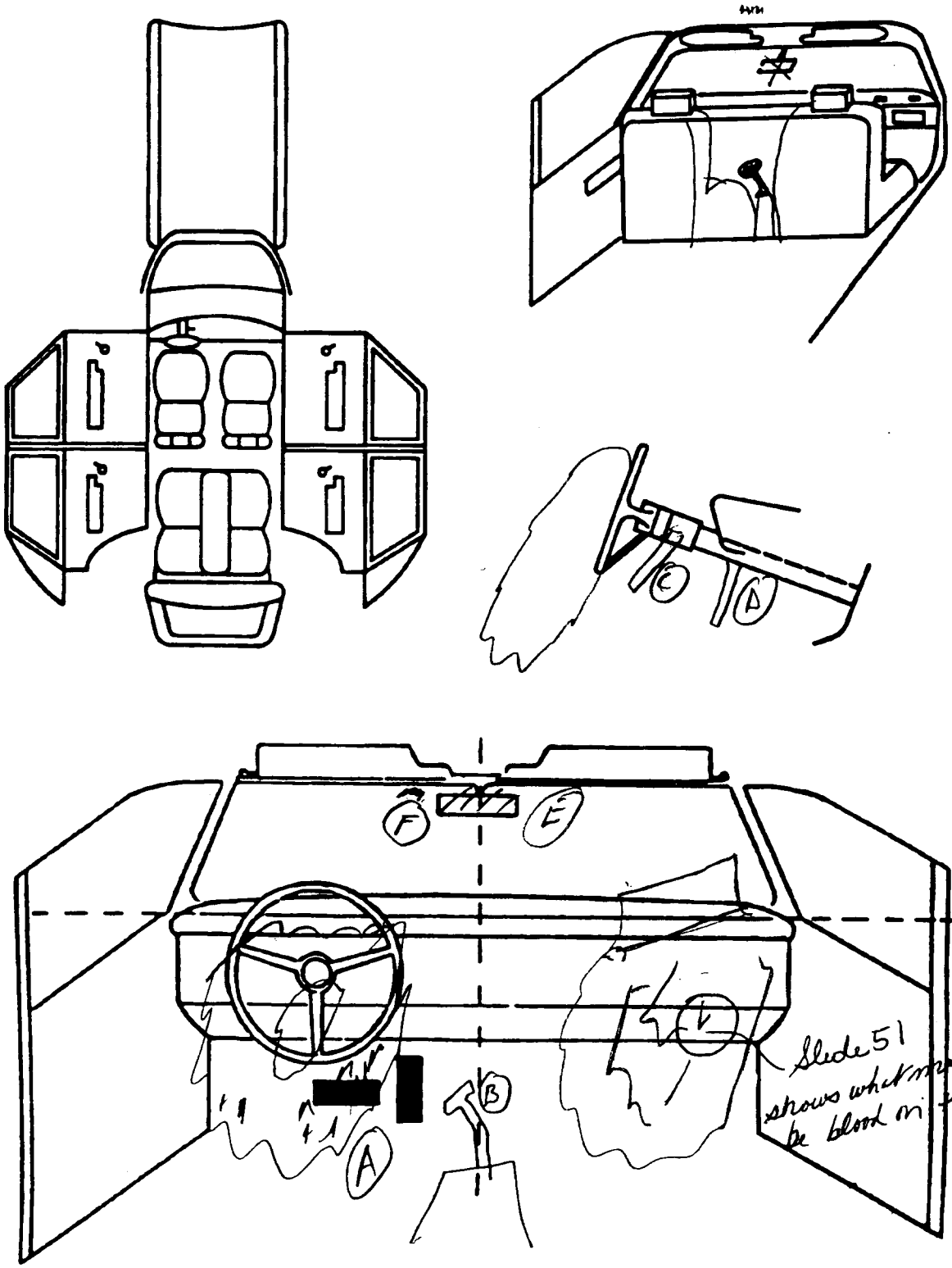

Sketch windshield contact(s) and the damaged area(s) on the instrument panel outline (e.g., radio, glove compartment, damage to instrument panel structure.
Cross hatch contact points, draw spider webs or use other annotation as may be appropriate.
Annotate the contacted area with a letter (begin with A) and list on the Points of Occupant Contact page.

POINTS OF OCCUPANT CONTACT

Contact	Interior Component Contacted	Occupant No. If Known	Body Region If Known	Supporting Physical Evidence	Confidence Level of Contact Point
A	170	01	chest	Fabric transfer + blood on bag	1
B	252	01	r arm	lower boot left + console broken out	1
C	007	01	r-leg	turn signal lever broken off	1
D	007	01	L-leg	wheel tilt lever pushed down	2
E	002	01	head	mirror + panel broken off	1
F	205	01	head	hair attached next to mirror	1
G					
H					
I					
J					
K					
L					
M					
N					

CODES FOR INTERIOR COMPONENTS

FRONT
- (001) Windshield
- (002) Mirror
- (003) Sunvisor
- (004) Steering wheel rim
- (005) Steering wheel hub/spoke
- (006) Steering wheel (combination of codes 004 and 005)
- (007) Steering column, transmission selector lever, other attachment
- (008) Cellular telephone or CB radio
- (009) Add on equipment(e.g., tape deck, air conditioner)
- (010) Left instrument panel and below
- (011) Center instrument panel and below
- (012) Right instrument panel and below
- (013) Glove compartment door
- (014) Knee bolster
- (015) Windshield including one or more of the following: front header, A (A1/A2)-pillar, instrument panel, mirror, or steering assembly (driver side only)
- (016) Windshield including one or more of the following: front header, A (A1/A2)-pillar, instrument panel, or mirror (passenger side only)
- (017) Windshield reinforced by exterior object, (specify): _____
- (019) Other front object (specify): _____

LEFT SIDE
- (051) Left side interior surface, excluding hardware or armrests
- (052) Left side hardware or armrest
- (053) Left A (A1/A2)-pillar
- (054) Left B-pillar
- (055) Other left pillar (specify): _____
- (056) Left side window glass
- (057) Left side window frame
- (058) Left side window sill
- (059) Left side window glass including one or more of the following: frame, window sill, A (A1/A2)-pillar, B-pillar, or roof side rail.
- (060) Other left side object (specify): _____

RIGHT SIDE
- (101) Right side interior surface, excluding hardware or armrests
- (102) Right side hardware or armrest
- (103) Right A (A1/A2)-pillar
- (104) Right B-pillar
- (105) Other right pillar (specify): _____
- (106) Right side window glass
- (107) Right side window frame
- (108) Right side window sill
- (109) Right side window glass including one or more of the following: frame, window sill, A (A1/A2)-pillar, B-pillar, or roof side rail.
- (110) Other right side object (specify): _____

INTERIOR
- (151) Seat, back support
- (152) Belt restraint webbing/buckle
- (153) Belt restraint B-pillar or door frame attachment point
- (154) Other restraint system component (specify): _____
- (155) Head restraint system
- (160) Other occupants (specify): _____
- (161) Interior loose objects
- (162) Child safety seat (specify): _____
- (163) Other interior object (specify): _____

AIR BAG
- (170) Air bag-driver side
- (175) Air bag compartment cover-driver side
- (180) Air bag-passenger side
- (185) Air bag compartment cover-passenger side
- (190) Other air bag (specify) _____
- (195) Other air bag compartment cover (specify) _____

ROOF
- (201) Front header
- (202) Rear header
- (203) Roof left side rail
- (204) Roof right side rail
- (205) Roof or convertible top

FLOOR
- (251) Floor (including toe pan)
- (252) Floor or console mounted transmission lever, including console
- (253) Parking brake handle
- (254) Foot controls including parking brake

REAR
- (301) Backlight (rear window)
- (302) Backlight storage rack, door, etc.
- (303) Other rear object (specify): _____

ADAPTIVE (ASSISTIVE) DRIVING EQUIPMENT
- (401) Hand controls for braking/acceleration
- (402) Steering control devices (attached to OEM steering wheel)
- (403) Steering knob attached to steering wheel
- (405) Replacement steering wheel (i.e., reduced diameter)
- (406) Joy stick steering controls
- (407) Wheelchair tie-downs
- (408) Modification to seat belts, (specify): _____
- (409) Additional or relocated switches, (specify): _____
- (410) Raised roof
- (411) Wall mounted head rest (used behind wheel chair)
- (412) Other adaptive device (specify): _____

CONFIDENCE LEVEL OF CONTACT POINT
- (1) Certain
- (2) Probable
- (3) Possible
- (9) Unknown

MANUAL RESTRAINTS

NOTES: Encode the applicable data **for each seat position** in the vehicle. The attribute for the variable may be found below. Restraint systems should be assessed during the vehicle inspection then coded on the Occupant Assessment Form.

If a Child safety seat is present, encode the data on the back of this page.

If the vehicle has automatic restraints available, encode the appropriate data on the back of the previous page.

		Left	Center	Right
FIRST	Availability	4		4
	Evidence of usage	04		04
	Used in this crash?	00		00
	Proper Use	0		0
	Failure Modes	0		0
	Anchorage Adjustment	2		3
SECOND	Availability	4	3	4
	Evidence of usage	04	03	04
	Used in this crash?	00	00	00
	Proper Use	0	0	0
	Failure Modes	0	0	0
	Anchorage Adjustment	1	0	1
OTHER	Availability			
	Evidence of usage			
	Used in this crash?			
	Proper Use			
	Failure Modes			
	Anchorage Adjustment			

Manual (Active) Belt System Availability

(0) None available
(1) Belt removed/destroyed
(2) Shoulder belt
(3) Lap belt
(4) Lap and shoulder belt
(5) Belt available - type unknown

Integral Belt Partially Destroyed

(6) Shoulder belt (lap belt destroyed/removed)
(7) Lap belt (shoulder belt destroyed/removed)
(8) Other belt (specify): _____
(9) Unknown

Manual (Active) Belt System Use

(00) None used, not available, or belt removed/destroyed
(01) Inoperable (specify): _____
(02) Shoulder belt
(03) Lap belt
(04) Lap and shoulder belt
(05) Belt used - type unknown
(08) Other belt used (specify): _____
(12) Shoulder belt used with child safety seat
(13) Lap belt used with child safety seat
(14) Lap and shoulder belt used with child safety seat
(15) Belt used with child safety seat - type unknown
(18) Other belt used with child safety seat (specify): _____
(99) Unknown if belt used

Proper Use of Manual (Active) Belts

(0) None used or not available
(1) Belt used properly
(2) Belt used properly with child safety seat

Belt Used Improperly

(3) Shoulder belt worn under arm
(4) Shoulder belt worn behind back or seat
(5) Belt worn around more than one person
(6) Lap belt worn on abdomen
(7) Lap belt or lap and shoulder belt used improperly with child safety seat (specify): _____
(8) Other improper use of manual belt system (specify): _____
(9) Unknown

Manual (Active) Belt Failure Modes During Accident

(0) No manual belt used or not available
(1) No manual belt failure(s)
(2) Torn webbing (stretched webbing not included)
(3) Broken buckle or latchplate
(4) Upper anchorage separated
(5) Other anchorage separated (specify): _____
(6) Broken retractor
(7) Combination of above (specify): _____
(8) Other manual belt failure (specify): _____
(9) Unknown

Shoulder Belt Upper Anchorage Adjustment

(0) No shoulder belt
(1) No upper anchorage adjustment for shoulder belt

Adjustable shoulder Belt Upper Anchorage

(2) In full up position
(3) In mid position
(4) In full down position
(5) Position unknown
(9) Unknown if position has adjustable upper anchorage adjustment

AUTOMATIC RESTRAINTS

NOTES: Encode the data for each applicable front seat position. The attribute for the variables may be found below. Restraint systems should be assessed during the vehicle inspection then coded on the Occupant Assessment Form.

AIR BAGS

		Left Front	Right Front	Other
FIRST	Availability/Function	1	1	
	Deployment	1	1	
	Failure	1	1	

Air Bag System Availability/Function
(0) Not equipped/not available
(1) Air bag

Non-functional
(2) Air bag disconnected (specify): _____
(3) Air bag not reinstalled
(9) Unknown

Are There Indications of Air Bag System Failure? (This Occupant Position)
(0) Not equipped/not available
(1) No
(2) Yes (specify): _____
(9) Unknown

Frontal Air Bag System Deployment (This Occupant Position)
(0) Not equipped/not available
(1) Deployed during accident (as a result of impact)
(2) Deployed inadvertently just prior to accident
(3) Deployed, accident sequence undetermined
(4) Deployed as a result of a noncollision event during accident sequence (e.g., fire, explosion, electrical)
(5) Unknown if deployed
(7) Nondeployed
(9) Unknown

Air Bag(s) Deployment, *Other* Than First Seat Frontal (This Occupant Position)
(0) Not equipped with an *"other"* air bag
(1) Deployed during accident (as a result of impact)
(2) Deployed inadvertently just prior to accident
(3) Deployed, details unknown
(4) Deployed as a result of a noncollision event during accident sequence (e.g., fire, explosion, electrical)
(5) Unknown if deployed
(7) Nondeployed
(9) Unknown

AUTOMATIC BELTS

		Left	Right
FIRST	Availability/Function		
	Use		
	Type		
	Proper Use		
	Failure Modes		

Automatic (Passive) Belt System Availability/Function
(0) Not equipped/not available
(1) 2 point automatic belts
(2) 3 point automatic belts
(3) Automatic belts - type unknown

Non-functional
(4) Automatic belts destroyed or rendered inoperative
(9) Unknown

Automatic (Passive) Belt System Use
(0) Not equipped/not available/destroyed or rendered inoperative
(1) Automatic belt in use
(2) Automatic belt not in use (manually disconnected, motorized track inoperative)
(3) Automatic belt use unknown
(9) Unknown

Automatic (Passive) Belt System Type
(0) Not equipped/not available
(1) Non-motorized system
(2) Motorized system
(9) Unknown

Proper Use of Automatic (Passive) Belt System
(0) Not equipped/not available/not used
(1) Automatic belt used properly
(2) Automatic belt used properly with child safety seat

Automatic Belt Used Improperly
(3) Automatic shoulder belt worn under arm
(4) Automatic shoulder belt worn behind back
(5) Automatic belt worn around more than one person
(6) Lap portion of automatic belt worn on abdomen
(7) Automatic lap and shoulder belt or automatic shoulder belt used improperly with child safety seat (specify): _____
(8) Other improper use of automatic belt system (specify): _____
(9) Unknown

Automatic (Passive) Belt Failure Modes During Accident
(0) Not equipped/not available/not in use
(1) No automatic belt failure(s)
(2) Torn webbing (stretched webbing not included)
(3) Broken buckle or latchplate
(4) Upper anchorage separated
(5) Other anchorage separated (specify): _____
(6) Broken retractor
(7) Combination of above (specify):
(8) Other automatic belt failure (specify): _____
(9) Unknown

FIRST SEAT FRONTAL AIR BAGS

NOTES: Encode the applicable data ***for the driver and first seat passenger*** in the vehicle. The attribute for the variable may be found below. Restraint systems should be assessed during the vehicle inspection then coded on the Occupant Assessment Form.

	Driver	Passenger
Type of air bag?	1	1
Flaps open at tear points?	2	2
Flaps damaged?	1	2
Air bag damaged?	01	01
Source of air bag damage	01	01
Air bag tethered?	2	1
Air bag have vent ports?	2	2
Other occupant contact air bag?	1	1
Occupant wearing eyewear?	4	4

Type of Air Bag
- (0) Not equipped/not available
- (1) Original manufacturer installed system
- (2) Retrofitted air bag
- (3) Replacement air bag
- (8) Unknown type of air bag
- (9) Unknown

Did Air Bag Module Cover Flap(s) Open At Designated Tear Points?
- (0) Not equipped/not available
- (1) No
- (2) Yes
- (3) Deployed, unknown if flap(s) opened at designated tear points
- (7) Not deployed
- (8) Unknown if deployed
- (9) Unknown

Were Air Bag Module Cover Flap(s) Damaged?
- (0) Not equipped/not available
- (1) No
- (2) Yes (specify): _____
- (3) Deployed, unknown if air bag module cover flap(s) damaged
- (7) Not deployed
- (8) Unknown if deployed
- (9) Unknown

Was There Damage To The Air Bag?
- (00) Not equipped/not available
- (01) Not damaged

Yes - Air Bag Damage
- (02) Ruptured
- (03) Cut
- (04) Torn
- (05) Holed
- (06) Burned
- (07) Abraded
- (88) Other damage (specify): _____
- (95) Damaged, details unknown
- (96) Deployed, unknown if damaged
- (97) Not deployed
- (98) Unknown if deployed
- (99) Unknown

Source of Air Bag Damage
- (00) Not equipped/not available
- (01) Not damaged
- (02) Object worn by occupant, (specify): _____
- (03) Object carried by occupant, (specify): _____
- (04) Adaptive/assistive controls, (specify): _____
- (05) Fire in vehicle
- (06) Thermal burns
- (07) Rescue or emergency efforts
- (88) Other damage source (specify): _____
- (95) Damaged, unknown source
- (96) Deployed, unknown if damaged
- (97) Not deployed
- (98) Unknown if deployed
- (99) Unknown

Was The Air Bag Tethered?
- (0) Not equipped/not available
- (1) No
- (2) Yes (specify number of tether straps): 2
- (3) Deployed, unknown if tethered
- (7) Not deployed
- (8) Unknown if deployed
- (9) Unknown

Did The Air Bag Have Vent Ports?
- (0) Not equipped/not available
- (1) No
- (2) Yes (specify number of vent ports): 2/2
- (3) Deployed, unknown if vent ports present
- (7) Not deployed
- (8) Unknown if deployed
- (9) Unknown

Was the Air Bag in this Occupant's Position Contacted by Another Occupant?
- (0) Not equipped/not available
- (1) No
- (2) Yes (specify): _____
- (3) Deployed, unknown if other occupant contact to air bag
- (7) Not deployed
- (8) Unknown if deployed
- (9) Unknown

Was This Occupant Wearing Eye-wear?
- (0) Not equipped/not available
- (1) No
- (2) Eyeglasses/sunglasses
- (3) Contact lenses
- (4) Deployed, unknown if eyewear worn
- (7) Not deployed
- (8) Unknown if deployed
- (9) Unknown

DRIVER AIR BAG DAMAGE AND CONTACT SKETCHES

1. SKETCH DAMAGE AND CONTACT EVIDENCE ON DRIVER AIR BAG (Front)

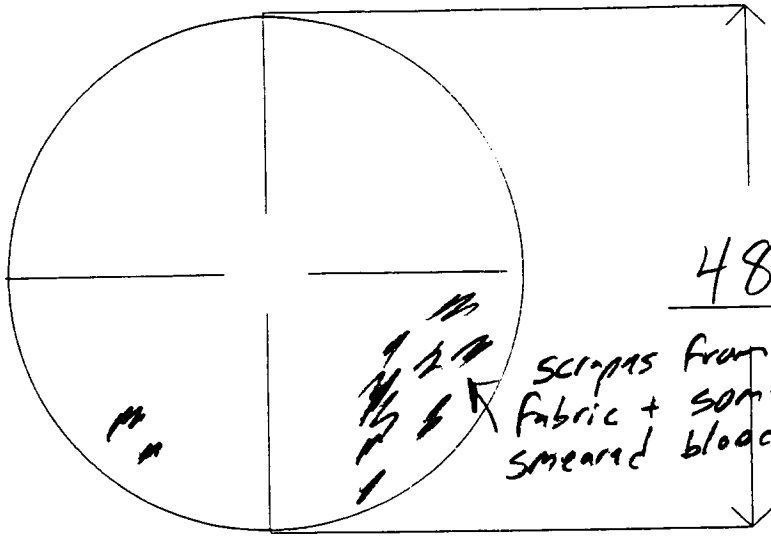

2. SKETCH DAMAGE AND CONTACT EVIDENCE ON DRIVER AIR BAG (Back)

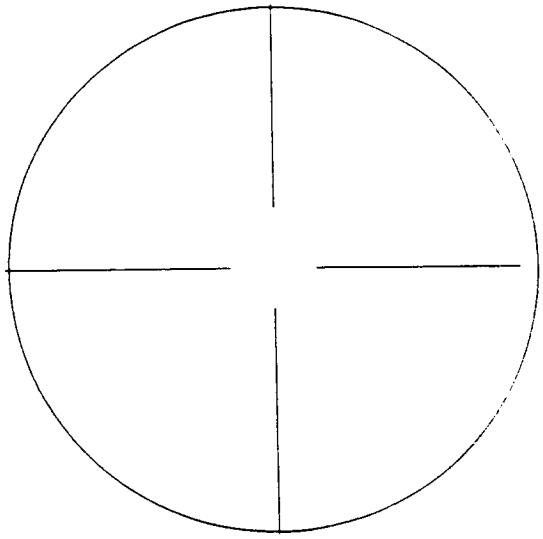

DRIVER AIR BAG SKETCHES (Cont'd)

3. DRIVER AIR BAG MODULE COVER FLAP SIZE (DOUBLE)

a. Upper Flap

width (W_U) 18

height (H_U) 11

b. Lower Flap

width (W_L) 16

height (H_L) 7

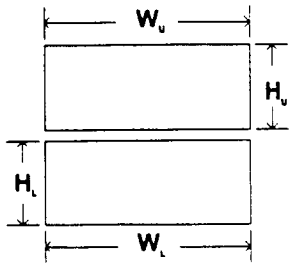

4. SKETCH OF OTHER TYPE OF AIR BAG MODULE FLAP AND SIZE

5. SKETCH OF OTHER TYPE OF AIR BAG VENT PORTS

6. SKETCH LOCATION OF CIRCULAR AIR BAG VENT PORTS

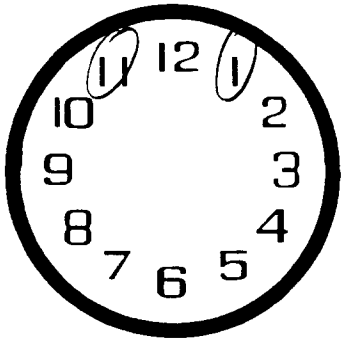

PASSENGER AIR BAG DAMAGE AND CONTACT SKETCHES

1. SKETCH DAMAGE AND CONTACT EVIDENCE ON PASSENGER AIR BAG (Front)

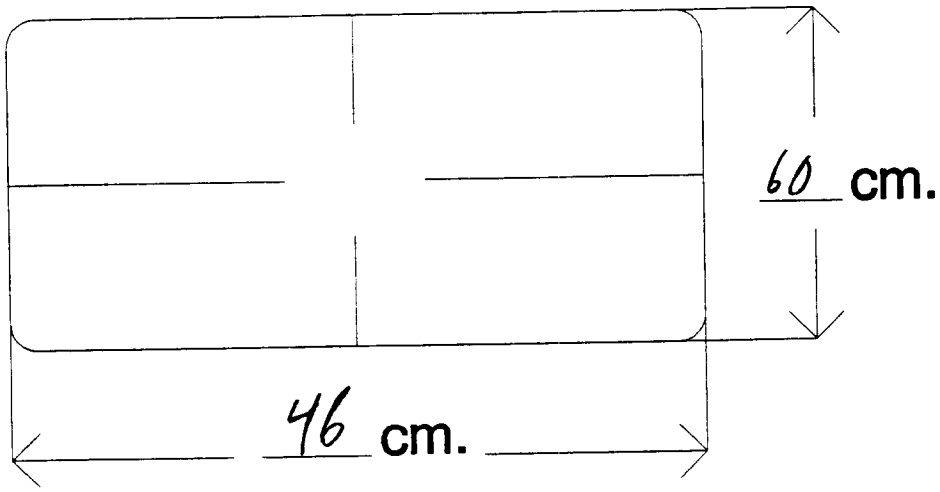

2. SKETCH DAMAGE AND CONTACT EVIDENCE ON PASSENGER AIR BAG (Back)

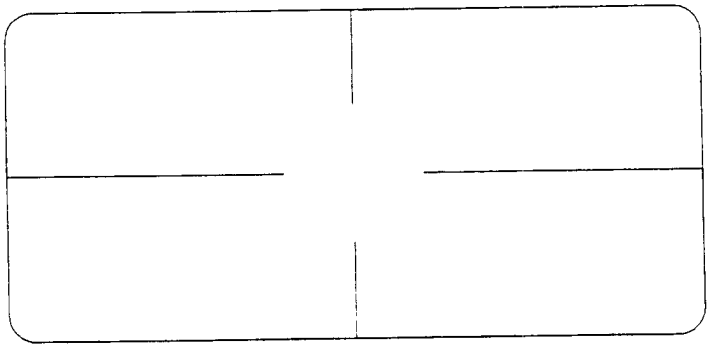

PASSENGER AIR BAG SKETCHES (Cont'd)

3. PASSENGER AIR BAG MODULE COVER FLAP SIZE (SINGLE)

a. Flap

width (W) 41

height (H) 22

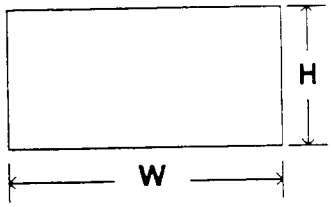

4. PASSENGER AIR BAG MODULE COVER FLAP SIZE (DOUBLE)

a. Upper Flap

width (W_U) _____

height (H_U) _____

b. Lower Flap

width (W_L) _____

height (H_L) _____

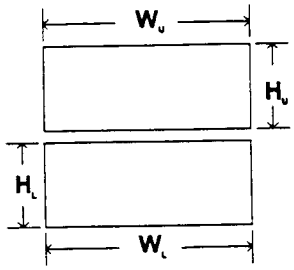

5. SKETCH OF OTHER TYPE OF AIR BAG MODULE FLAP AND SIZE

6. SKETCH OF OTHER TYPE OF AIR BAG VENT PORTS

7. SKETCH LOCATION OF RECTANGULAR AIR BAG VENT PORTS

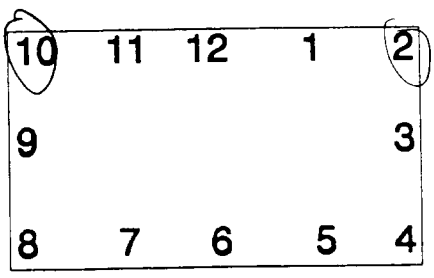

"OTHER" AIR BAG DAMAGE AND CONTACT SKETCHES

1. SKETCH DAMAGE AND CONTACT EVIDENCE ON *"OTHER"* AIR BAG (Front)

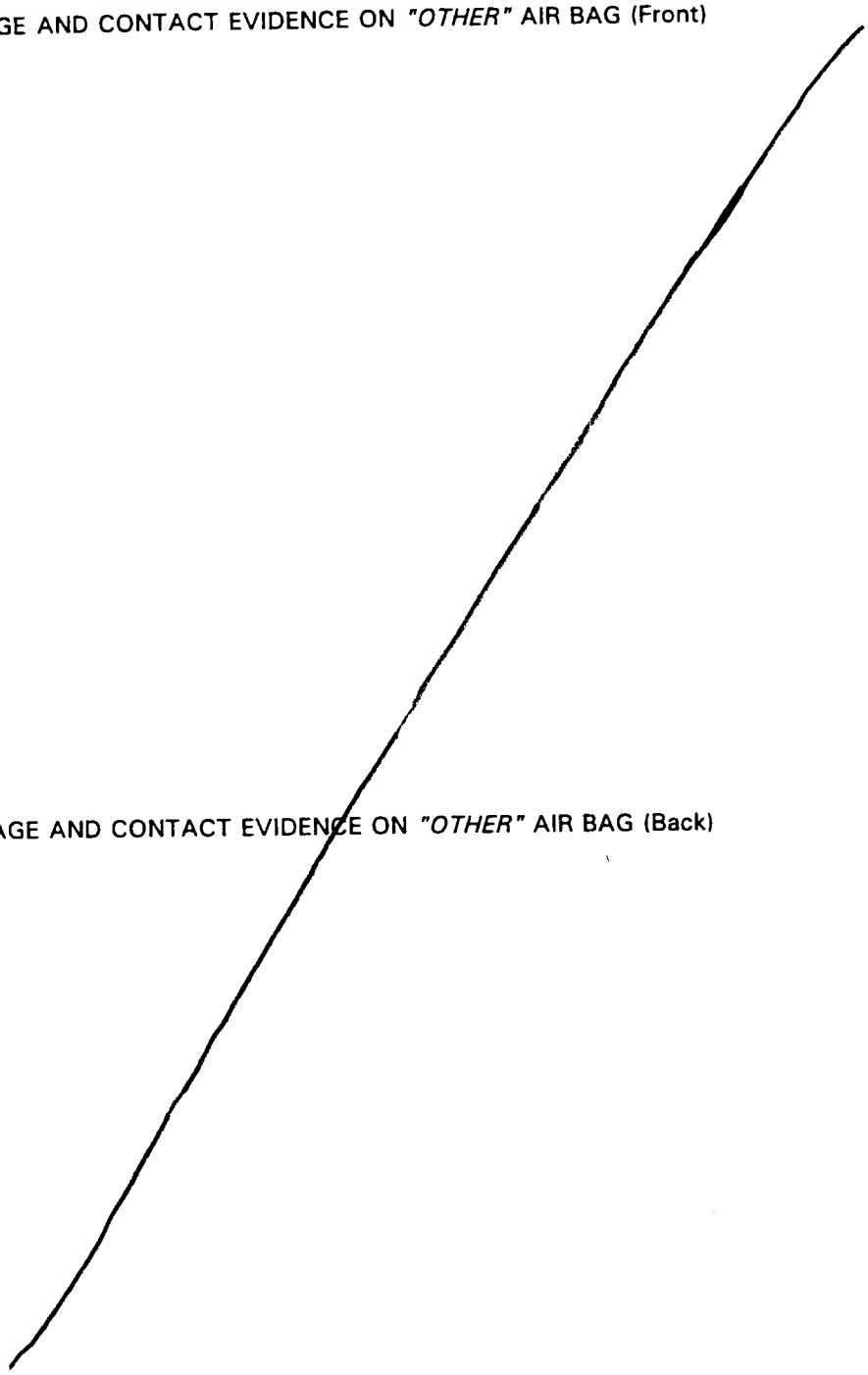

2. SKETCH DAMAGE AND CONTACT EVIDENCE ON *"OTHER"* AIR BAG (Back)

"OTHER" AIR BAG SKETCHES (Cont'd)

3. SKETCH AIR BAG MODULE FLAP AND SIZE OR OPENING FOR AIRBAG

4. SKETCH AIR BAG VENT PORTS

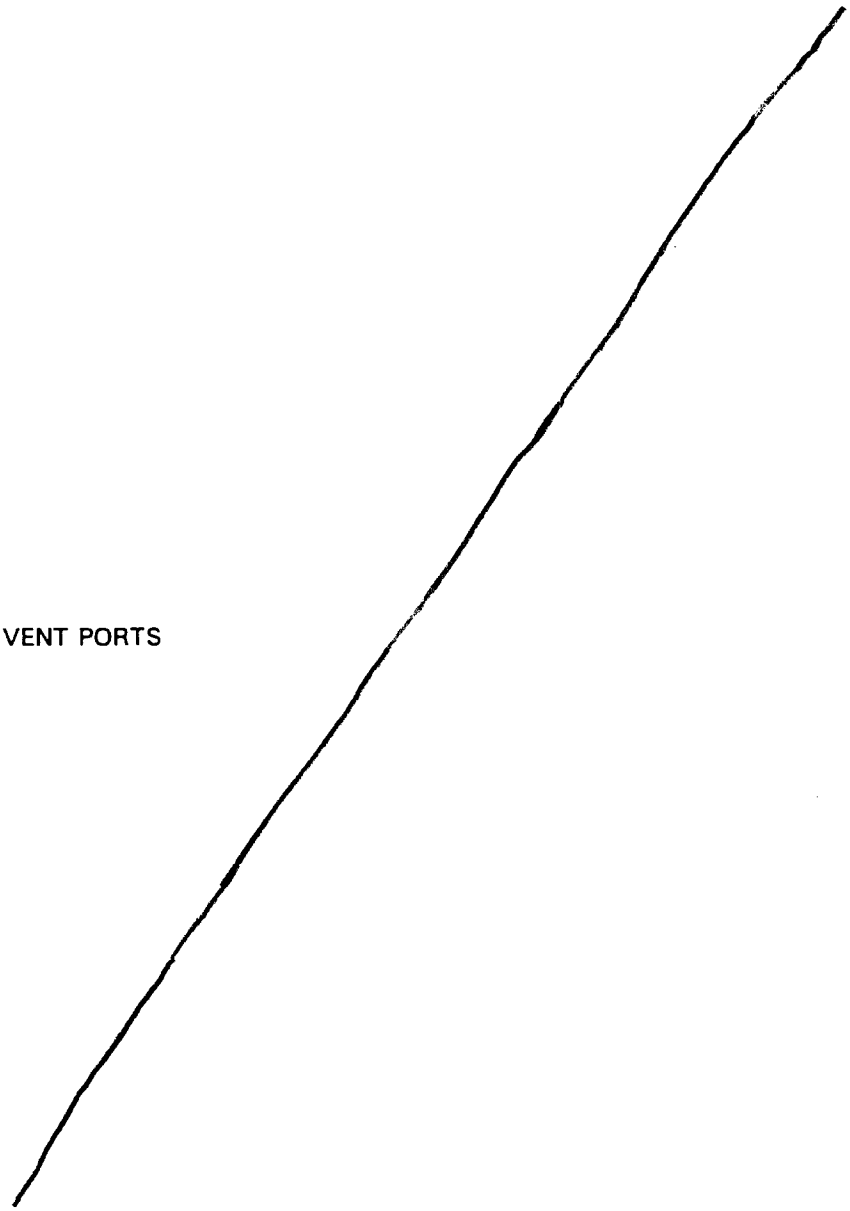

HEAD RESTRAINTS/SEAT EVALUATION

NOTES: Encode the applicable data for each seat position in the vehicle. The attribute for these variables may be found at the bottom of the page. Head restraint type/damage and seat type/performance should be assessed during the vehicle inspection then coded on the Occupant Assessment Form.

		Left	Center	Right
FIRST	Head Restraint Type/Damage	3		3
	Seat Type	01		01
	Seat Performance	1		0
	Seat Orientation	1		0
	Seat Track Position	6		0
	Seat Back Incline Pre/Post Impact	23		00
SECOND	Head Restraint Type/Damage	1	0	1
	Seat Type	03	03	03
	Seat Performance	0	0	0
	Seat Orientation	0	0	0
	Seat Track Position	0	0	0
	Seat Back Incline Pre/Post Impact	00	00	00
THIRD	Head Restraint Type/Damage			
	Seat Type			
	Seat Performance			
	Seat Orientation			
	Seat Track Position			
	Seat Back Incline Pre/Post Impact			
OTHER	Head Restraint Type/Damage			
	Seat Type			
	Seat Performance			
	Seat Orientation			
	Seat Track Position			
	Seat Back Incline Pre/Post Impact			

DESCRIBE ANY INDICATION OF ABNORMAL OCCUPANT POSTURE

(I.E., UNUSUAL OCCUPANT CONTACT PATTERN)

HEAD RESTRAINTS/SEAT EVALUATION

Head Restraint Type/Damage by Occupant at This Occupant Position
(0) No head restraints
(1) Integral — no damage
(2) Integral — damaged during accident
(3) Adjustable — no damage
(4) Adjustable — damaged during accident
(5) Add-on — no damage
(6) Add-on — damaged during accident
(8) Other Specify):_____
(9) Unknown

Seat Type (this Occupant Position)
(00) Occupant not seated or no seat
(01) Bucket
(02) Bucket with folding back
(03) Bench
(04) Bench with separate back cushions
(05) Bench with folding back(s)
(06) Split bench with separate back cushions
(07) Split bench with folding back(s)
(08) Pedestal (i.e., column supported)
(09) Other seat type (specify):
(10) Box mounted seat (i.e., van type)
(99) Unknown

Seat Performance (this Occupant Position)
(0) Occupant not seated or no seat
(1) No seat performance failure(s)
(2) Seat adjusters failed
(3) Seat back folding locks or "seat back" failed (specify):
(4) Seat tracks/anchors failed
(5) Deformed by impact of occupant
(6) Deformed by passenger compartment intrusion (specify):
(7) Combination of above (specify):
(8) Other (specify):
(9) Unknown

Seat Orientation (this Occupant Position)
(0) Occupant not seated or no seat
(1) Forward facing seat
(2) Rear facing seat
(3) Side facing seat (inward)
(4) Side facing seat (outward)
(8) Other (specify):
(9) Unknown

Seat Track Adjusted Position Prior To Impact
(0) Occupant not seated or no seat
(1) Non-adjustable seat track

Adjustable Seat Track
(2) Seat at forward most track position
(3) Seat between forward most and middle track positions
(4) Seat at middle track position
(5) Seat between middle and rear most track positions
(6) Seat at rear most track position
(9) Unknown

Seat Back Incline Prior and Post Impact
(00) Occupant not seated or no seat
(01) Not adjustable

Upright prior to impact
(11) Moved to completely rearward position
(12) Moved to rearward midrange position
(13) Moved to slightly rearward position
(14) Retained pre-impact position
(15) Moved to slightly forward position
(16) Moved to forward midrange position
(17) Moved to completely forward position

Slightly reclined prior to impact
(21) Moved to completely rearward position
(22) Moved to rearward midrange position
(23) Retained pre-impact postion
(24) Moved to upright position
(25) Moved to slightly forward position
(26) Moved to forward midrange position
(27) Moved to completely forward position

Completely reclined prior to impact
(31) Retained pre-impact position
(32) Moved to rearward midrange position
(33) Moved to slightly rearward position
(34) Moved to upright position
(35) Moved to slightly forward position
(36) Moved to forward midrange position
(37) Moved to completely forward position

(99) Unknown

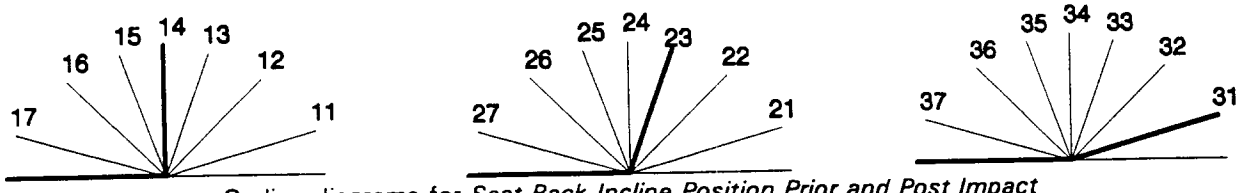

Coding diagrams for *Seat Back Incline Position Prior and Post Impact*

DESCRIBE ANY INDICATION OF ABNORMAL OCCUPANT POSTURE (I.E., UNUSUAL OCCUPANT CONTACT PATTERN)

CHILD SAFETY SEAT FIELD ASSESSMENT

When a child safety seat is present enter the occupant's number in the first row and complete the column below the occupant's number using the codes listed below. Complete a column for each child safety seat present.

Occupant Number						
1. Type of Child Safety Seat						
2. Child Safety Seat Orientation						
3. Child Safety Seat Harness Usage						
4. Child Safety Seat Shield Usage						
5. Child Safety Seat Tether Usage						
6. Child Safety Seat Make/Model	Specify Below for Each Child Safety Seat					

1. Type of Child Safety Seat

   (0) No child safety seat
   (1) Infant seat
   (2) Toddler seat
   (3) Convertible seat
   (4) Booster seat
   (7) Other type child safety seat (specify):

   _____

   (8) Unknown child safety seat type
   (9) Unknown if child safety seat used

2. Child Safety Seat Orientation

   (00) No child safety seat

   Designed for Rear Facing for This Age/Weight
   (01) Rear facing
   (02) Forward facing
   (08) Other orientation (specify):

   _____

   (09) Unknown orientation

   Designed for Forward Facing for This Age/Weight
   (11) Rear facing
   (12) Forward facing
   (18) Other orientation (specify):

   _____

   (19) Unknown orientation

   Unknown Design or Orientation For This Age/Weight, or Unknown Age/Weight
   (21) Rear facing
   (22) Forward facing
   (28) Other orientation (specify):

   _____

   (29) Unknown orientation

   (99) Unknown if child safety seat used

3. Child Safety Seat Harness Usage

4. Child Safety Seat Shield Usage

5. Child Safety Seat Tether Usage
   Note: Options Below Are Used for Variables 3-5.

   (00) No child safety seat

   Not Designed with Harness/Shield/Tether
   (01) After market harness/shield/tether added, not used
   (02) After market harness/shield/tether used
   (03) Child safety seat used, but no after market harness/shield/tether added
   (09) Unknown if harness/shield/tether added or used

   Designed With Harness/Shield/Tether
   (11) Harness/shield/tether not used
   (12) Harness/shield/tether used
   (19) Unknown if harness/shield/tether used

   Unknown If Designed With Harness/Shield/Tether
   (21) Harness/shield/tether not used
   (22) Harness/shield/tether used
   (29) Unknown if harness/shield/tether used

   (99) Unknown if child safety seat used

6. Child Safety Seat Make/Model
   (Specify make/model and occupant number)

   _____

   _____

   _____

   _____

EJECTION/ENTRAPMENT DATA

Complete the following if the researcher has any indication that an occupant was either ejected from or entrapped in the vehicle. Code the appropriate data on the Occupant Assessment Form.

EJECTION No [X] Yes [ ]

Describe indications of ejection and body parts involved in partial ejection(s):

Occupant Number						
Ejection						
(Note on Vehicle Interior Sketch) Ejection Area						
Ejection Medium						
Medium Status						

Ejection
(1) Complete ejection
(2) Partial ejection
(3) Ejection, Unknown degree
(9) Unknown

Ejection Area
(1) Windshield
(2) Left front
(3) Right front
(4) Left rear
(5) Right rear
(6) Rear
(7) Roof
(8) Other area (e.g., back of pickup, etc.) (specify): _____
(9) Unknown

Ejection Medium
(1) Door/hatch/tailgate
(2) Nonfixed roof structure
(3) Fixed glazing
(4) Nonfixed glazing (specify): _____
(5) Integral structure
(8) Other medium (specify): _____
(9) Unknown

Medium Status (Immediately Prior to Impact)
(1) Open
(2) Closed
(3) Integral structure
(9) Unknown

ENTRAPMENT No [X] Yes [ ]

Describe entrapment mechanism: _____

Component(s): _____

(Note in vehicle interior diagram)

U.S. Department of Transportation
National Highway Traffic Safety Administration

OCCUPANT ASSESSMENT FORM

Form Approved
O.M.B. No. 2127-0021
NATIONAL ACCIDENT SAMPLING SYSTEM
CRASHWORTHINESS DATA SYSTEM

1. Primary Sampling Unit Number: 09
2. Case Number - Stratum: 167A
3. Vehicle Number: 01
4. Occupant Number: 01

OCCUPANT'S CHARACTERISTICS

5. Occupant's Age: 30
Code actual age at time of accident.
(00) Less than one year old (specify by month): _____
(97) 97 years and older
(99) Unknown

6. Occupant's Sex: 1
(1) Male
(2) Female-not reported pregnant
(3) Female-pregnant-1st trimester(1st-3rd month)
(4) Female-pregnant-2nd trimester(4th-6th month)
(5) Female-pregnant-3rd trimester(7th-9th month)
(6) Female-pregnant-term unknown
(9) Unknown

7. Occupant's Height: 183
Code actual height to the nearest centimeter.
(999) Unknown

72 inches X 2.54 = 183 centimeters

8. Occupant's Weight: 082 / 093
Code actual weight to the nearest kilogram.
(999)Unknown

180 pounds X .4536 = 082 / 093 kilograms

AUT: 204

9. Occupant's Role: 1
(1) Driver
(2) Passenger
(9) Unknown

OCCUPANT'S SEATING

10. Occupant's Seat Position: 11
Front Seat
(11) Left side
(12) Middle
(13) Right side
(14) Other (specify): _____
(15) On or in the lap of another occupant

Second Seat
(21) Left side
(22) Middle
(23) Right side
(24) Other (specify): _____
(25) On or in the lap of another occupant

Third Seat
(31) Left side
(32) Middle
(33) Right side
(34) Other (specify): _____
(35) On or in the lap of another occupant

Fourth Seat
(41) Left side
(42) Middle
(43) Right side
(44) Other (specify): _____
(45) On or in the lap of another occupant

(97) In or on unenclosed area
(98) Other seat (specify): _____
(99) Unknown

11. Occupant's Posture: 9
(0) Normal posture

Abnormal posture
(1) Kneeling or standing on seat
(2) Lying on or across seat
(3) Kneeling, standing or sitting in front of seat
(4) Sitting sideways or turned to talk with another occupant or to look out a rear window
(5) Sitting on a console
(6) Lying back in a reclined seat position
(7) Bracing with feet or hands on a surface in front of seat
(8) Other abnormal posture (specify): _____
(9) Unknown

This report is authorized by P.L. 89-563, Title 1, Section 106, 108, and 112. While you are not required to respond, your cooperation is needed to make the results of this data collection effort comprehensive, accurate, and timely.

EJECTION/ENTRAPMENT

12. Ejection 0
    (0) No ejection
    (1) Complete ejection
    (2) Partial ejection
    (3) Ejection, unknown degree
    (9) Unknown

13. Ejection Area 0
    (0) No ejection
    (1) Windshield
    (2) Left front
    (3) Right front
    (4) Left rear
    (5) Right rear
    (6) Rear
    (7) Roof
    (8) Other area (e.g., back of pickup, etc.) (specify):_____
    (9) Unknown

14. Ejection Medium 0
    (0) No ejection
    (1) Door/hatch/tailgate
    (2) Nonfixed roof structure
    (3) Fixed glazing
    (4) Nonfixed glazing (specify):
    _____
    (5) Integral structure
    (8) Other medium (specify):
    _____
    (9) Unknown

15. Medium Status (Immediately Prior To Impact) 0
    (0) No ejection
    (1) Open
    (2) Closed
    (3) Integral structure
    (9) Unknown

16. Entrapment 0
    (0) Not entrapped/exit not inhibited
    (1) Entrapped/pinned - mechanically restrained
    (2) Could not exit vehicle due to jammed doors, fire, etc.
    (specify):_____
    _____
    (9) Unknown

17. Occupant Mobility 0
    (0) Occupant fatal before removed from vehicle
    (1) Removed from vehicle while unconscious or disoriented
    (2) Removed from vehicle due to injuries
    (3) Exited vehicle with some assistance
    (4) Exited vehicle under own power
    (5) Occupant fully ejected
    (9) Unknown

BELT SYSTEM FUNCTION

18. Manual (Active) Belt System Availability — 4
(0) None available
(1) Belt removed/destroyed
(2) Shoulder belt
(3) Lap belt
(4) Lap and shoulder belt
(5) Belt available—type unknown

Integral Belt Partially Destroyed
(6) Shoulder belt (lap belt destroyed/removed)
(7) Lap belt (shoulder belt destroyed/removed)
(8) Other belt (specify): _____
(9) Unknown

19. Manual (Active) Belt System Use — 00
(00) None used, not available, or belt removed/destroyed
(01) Inoperative (specify): _____
(02) Shoulder belt
(03) Lap belt
(04) Lap and shoulder belt
(05) Belt used—type unknown
(08) Other belt used (specify): _____
(12) Shoulder belt used with child safety seat
(13) Lap belt used with child safety seat
(14) Lap and shoulder belt used with child safety seat
(15) Belt used with child safety seat—type unknown
(18) Other belt used with child safety seat (specify): _____
(99) Unknown if belt used

20. Proper Use of Manual (Active) Belts — 0
(0) None used or not available
(1) Belt used properly
(2) Belt used properly with child safety seat

Belt Used Improperly
(3) Shoulder belt worn under arm
(4) Shoulder belt worn behind back or seat
(5) Belt worn around more than one person
(6) Lap belt worn on abdomen
(7) Lap belt or lap and shoulder belt used improperly with child safety seat (specify): _____
(8) Other improper use of manual belt system (specify): _____
(9) Unknown

21. Manual (Active) Belt Failure Modes During Accident — 0
(0) No manual belt used or not available
(1) No manual belt failure(s)
(2) Torn webbing (stretched webbing not included)
(3) Broken buckle or latchplate
(4) Upper anchorage separated
(5) Other anchorage separated (specify): _____
(6) Broken retractor
(7) Combination of above (specify): _____
(8) Other manual belt failure (specify): _____
(9) Unknown

22. Shoulder Belt Upper Anchorage Adjustment — 2
(0) No shoulder belt
(1) No upper anchorage adjustment for shoulder belt

Adjustable shoulder Belt Upper Anchorage
(2) In full up position
(3) In mid position
(4) In full down position
(5) Position unknown
(9) Unknown if position has adjustable upper anchorage adjustment

23. Automatic (Passive) Belt System Availability/ Function — 0
(0) Not equipped/not available
(1) 2 point automatic belts
(2) 3 point automatic belts
(3) Automatic belts - type unknown

Non-functional
(4) Automatic belts destroyed or rendered inoperative
(9) Unknown

24. Automatic (Passive) Belt System Use — 0
(0) Not equipped/not available/destroyed or rendered inoperative
(1) Automatic belt in use
(2) Automatic belt not in use (manually disconnected, motorized track inoperative) (specify): _____
(3) Automatic belt use unknown
(9) Unknown

25. Automatic (Passive) Belt System Type — 0
(0) Not equipped/not available
(1) Non-motorized system
(2) Motorized system
(9) Unknown

26. Proper Use of Automatic (Passive) Belt System — 0
(0) Not equipped/not available/not used
(1) Automatic belt used properly
(2) Automatic belt used properly with child safety seat

Automatic Belt Used Improperly
(3) Automatic shoulder belt worn under arm
(4) Automatic shoulder belt worn behind back
(5) Automatic belt worn around more than one person
(6) Lap portion of automatic belt worn on abdomen
(7) Automatic lap and shoulder belt or automatic shoulder belt used improperly with child safety seat (specify): _____
(8) Other improper use of automatic belt system (specify): _____
(9) Unknown

27. Automatic (Passive) Belt Failure Modes During Accident — 0
(0) Not equipped/not available/not in use
(1) No automatic belt failure(s)
(2) Torn webbing (stretched webbing not included)
(3) Broken buckle or latchplate
(4) Upper anchorage separated
(5) Other anchorage separated (specify): _____
(6) Broken retractor
(7) Combination of above (specify):
(8) Other automatic belt failure (specify): _____
(9) Unknown

POLICE REPORTED RESTRAINT USE

28. Police Reported Belt Use 4
    (0) None used
    (1) Police did not indicate belt use
    (2) Shoulder belt
    (3) Lap belt
    (4) Lap and shoulder belt
    (5) Belt used, type not specified
    (6) Child safety seat
    (7) Automatic belt
    (8) Other type belt, (specify): _____
    (9) Police indicated "unknown"

29. Police Reported Air Bag Availability/Function 2
    (0) No air bag available
    (1) Police did not indicate air bag availability/function
    (2) Deployed
    (3) Not deployed
    (4) Unknown if deployed
    (9) Police indicated "unknown"

Check the Primary Source Used In Determining Belt Use.

[ ] Not equipped/not available/destroyed or rendered inoperative
[✓] Vehicle inspection
[ ] Official injury data
[ ] Driver/occupant interview
[ ] Other (specify): _____
[ ] Unknown if belt used

AIR BAG SYSTEM FUNCTION

30. Frontal Air Bag System Availability/Function (This Occupant Position) 1
    (0) Not equipped/not available
    (1) Air bag

    Non-functional
    (2) Air bag disconnected (specify): _____
    (3) Air bag not reinstalled
    (9) Unknown

31. Frontal Air Bag System Deployment (This Occupant Position) 1
    (0) Not equipped/not available
    (1) Deployed during accident (as a result of impact)
    (2) Deployed inadvertently just prior to accident
    (3) Deployed, details unknown
    (4) Deployed as a result of a noncollision event during accident sequence (e.g., fire, explosion, electrical)
    (5) Unknown if deployed
    (7) Nondeployed
    (9) Unknown

32. Other Than First Seat Frontal Air Bag Availability/Function (This Occupant Position) 0
    (0) Not equipped/not available
    (1) Air bag

    Non-functional
    (2) Air bag disconnected (specify): _____
    (3) Air bag not reinstalled
    (9) Unknown

    Specify type of "other" air bag present: _____

33. Air Bag(s) Deployment, Other Than First Seat Frontal (This Occupant Position) 0
    (0) Not equipped with an "other" air bag
    (1) Deployed during accident (as a result of impact)
    (2) Deployed inadvertently just prior to accident
    (3) Deployed, details unknown
    (4) Deployed as a result of a noncollision event during accident sequence (e.g., fire, explosion, electrical)
    (5) Unknown if deployed
    (7) Nondeployed
    (9) Unknown

34. Are There Indications of Air Bag System Failure? (This Occupant Position) 1
    (0) Not equipped/not available
    (1) No
    (2) Yes (specify): _____
    (9) Unknown

FIRST SEAT FRONTAL AIR BAG SYSTEM EVALUATION

35. Had Vehicle Been in Previous Accident(s)? 9
(0) Not equipped/not available
(1) No previous accidents

Yes
(2) Previous accident(s) without deployment(s)
(3) One previous accident with deployment
(4) More than one previous accident with at least one deployment
(8) Previous accidents, unknown deployment status
(9) Unknown

36. Type of Air Bag 9
(0) Not equipped/not available
(1) Original manufacturer installed system
(2) Retrofitted air bag
(3) Replacement air bag
(8) Unknown type of air bag
(9) Unknown

37. Had Any Prior Maintenance/Service Been Performed On This Air Bag System? 9
(0) Not equipped/not available
(1) No prior maintenance
(2) Yes, prior maintenance (specify): _____
(9) Unknown

38. Air Bag Deployment Accident Event Sequence Number 01
(00) Not equipped/not available
____ Code the accident event sequence number that initiated the air bag deployment
(96) Deployed, unknown event
(97) Not deployed
(98) Unknown if deployed
(99) Unknown

39. CDC For Air Bag Deployment Impact 1
(0) Not equipped/not available
(1) Highest delta V
(2) Second highest delta V
(3) Other non-coded delta V (specify): _____
(6) Deployed, unknown event
(7) Not deployed
(8) Unknown if deployed
(9) Unknown

40. Longitudinal Component of Delta V For Air Bag Deployment Impact + - 996
(_000) Not equipped/not available
Code the value of the delta V for the impact that initiated the air bag deployment
(_996) Deployment, unknown longitudinal Delta V
(_997) Not deployed
(_998) Unknown if deployed
(_999) Unknown

41. Did Air Bag Module Cover Flap(s) Open At Designated Tear Points? 2
(0) Not equipped/not available
(1) No
(2) Yes
(3) Deployed, unknown if flap(s) opened at designated tear points
(7) Not deployed
(8) Unknown if deployed
(9) Unknown

42. Were Air Bag Module Cover Flap(s) Damaged? 1
(0) Not equipped/not available
(1) No
(2) Yes (specify): _____
(3) Deployed, unknown if air bag module cover flap(s) damaged
(7) Not deployed
(8) Unknown if deployed
(9) Unknown

43. Was There Damage To The Air Bag? 01
(00) Not equipped/not available
(01) Not damaged

Yes - Air Bag Damage
(02) Ruptured
(03) Cut
(04) Torn
(05) Holed
(06) Burned
(07) Abraded
(88) Other damage (specify): _____
(95) Damaged, details unknown
(96) Deployed, unknown if damaged
(97) Not deployed
(98) Unknown if deployed
(99) Unknown

FIRST SEAT FRONTAL AIR BAG SYSTEM EVALUATION *continued*

44. Source of Air Bag Damage 01
(00) Not equipped/not available
(01) Not damaged
(02) Object worn by occupant, (specify):
(03) Object carried by occupant, (specify):
(04) Adaptive/assistive controls, (specify):
(05) Fire in vehicle
(06) Thermal burns
(07) Rescue or emergency efforts
(88) Other damage source (specify):
(95) Damaged, unknown source
(96) Deployed, unknown if damaged
(97) Not deployed
(98) Unknown if deployed
(99) Unknown

45. Was The Air Bag Tethered? 2
(0) Not equipped/not available
(1) No
(2) Yes (specify number of tether straps): 2
(3) Deployed, unknown if tethered
(7) Not deployed
(8) Unknown if deployed
(9) Unknown

46. Did The Air Bag Have Vent Ports? 2
(0) Not equipped/not available
(1) No
(2) Yes (specify number of vent ports): 2
(3) Deployed, unknown if vent ports present
(7) Not deployed
(8) Unknown if deployed
(9) Unknown

47. Was the Air Bag in this Occupant's Position Contacted by Another Occupant? 1
(0) Not equipped/not available
(1) No
(2) Yes (specify):
(3) Deployed, unknown if other occupant contact to air bag
(7) Not deployed
(8) Unknown if deployed
(9) Unknown

48. Was This Occupant Wearing Eye-wear? 1
(0) Not equipped/not available
(1) No
(2) Eyeglasses/sunglasses
(3) Contact lenses
(4) Deployed, unknown if eyewear worn
(7) Not deployed
(8) Unknown if deployed
(9) Unknown

HEAD RESTRAINT AND SEAT EVALUATION

49. Head Restraint Type/Damage by Occupant at This Occupant Position 3
(0) No head restraints
(1) Integral—no damage
(2) Integral—damaged during accident
(3) Adjustable—no damage
(4) Adjustable—damaged during accident
(5) Add-on—no damage
(6) Add-on—damaged during accident
(8) Other (specify):
(9) Unknown

50. Seat Type (this Occupant Position) 01
(00) Occupant not seated or no seat
(01) Bucket
(02) Bucket with folding back
(03) Bench
(04) Bench with separate back cushions
(05) Bench with folding back(s)
(06) Split bench with separate back cushions
(07) Split bench with folding back(s)
(08) Pedestal (i.e., column supported)
(09) Box mounted seat (i.e., van type)
(10) Other seat type (specify):
(99) Unknown

51. Seat Orientation (this Occupant Position) 1
(0) Occupant not seated or no seat
(1) Forward facing seat
(2) Rear facing seat
(3) Side facing seat (inward)
(4) Side facing seat (outward)
(8) Other (specify):
(9) Unknown

52. Seat Track Adjusted Position Prior To Impact 6
(0) Occupant not seated or no seat
(1) Non-adjustable seat track

Adjustable Seat Track
(2) Seat at forward most track position
(3) Seat between forward most and middle track positions
(4) Seat at middle track position
(5) Seat between middle and rear most track positions
(6) Seat at rear most track position
(9) Unknown

HEAD RESTRAINT AND SEAT EVALUATION *continued*

53. Seat Back Incline Prior and Post Impact 23
(00) Occupant not seated or no seat
(01) Not adjustable

Upright prior to impact
(11) Moved to completely rearward position
(12) Moved to rearward midrange position
(13) Moved to slightly rearward position
(14) Retained pre-impact position
(15) Moved to slightly forward position
(16) Moved to forward midrange position
(17) Moved to completely forward position

Slightly reclined prior to impact
(21) Moved to completely rearward position
(22) Moved to rearward midrange position
(23) Retained pre-impact position
(24) Moved to upright position
(25) Moved to slightly forward position
(26) Moved to forward midrange position
(27) Moved to completely forward position

Completely reclined prior to impact
(31) Retained pre-impact position
(32) Moved to rearward midrange position
(33) Moved to slightly rearward position
(34) Moved to upright position
(35) Moved to slightly forward position
(36) Moved to forward midrange position
(37) Moved to completely forward position

(99) Unknown

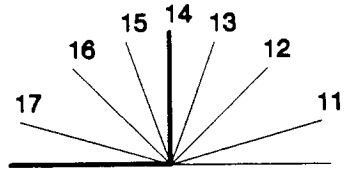

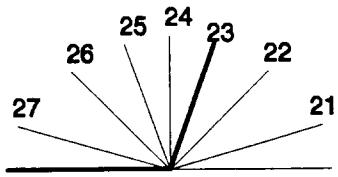

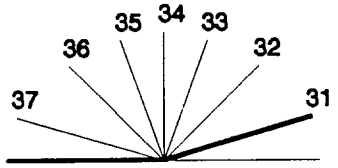

54. Seat Performance (this Occupant Position) 1
(0) Occupant not seated or no seat
(1) No seat performance failure(s)
(2) Seat adjusters failed
(3) Seat back folding locks or "seat back" failed (specify):_____
(4) Seat track/anchors failed
(5) Deformed by impact of occupant
(6) Deformed by passenger compartment intrusion, (specify):_____
_____
(7) Combination of above (specify):
_____
(8) Other (specify): _____
(9) Unknown

CHILD SAFETY SEAT

55. Child Safety Seat Make/Model 0 0 0
(000) No child safety seat
Applicable codes are found in your NASS CDS Data Collection, Coding and Editing
(950) Built-in child safety seat
(997) Other make/model (specify):
_____
(998) Unknown make/model
(999) Unknown if child safety seat used

56. Type of Child Safety Seat 0
(0) No child safety seat
(1) Infant seat
(2) Toddler seat
(3) Convertible seat
(4) Booster seat - with shield
(5) Booster seat - without shield
(7) Other type child safety seat (specify):
_____
(8) Unknown child safety seat type
(9) Unknown if child safety seat used

57. Child Safety Seat Orientation 0 0
(00) No child safety seat

Designed for Rear Facing for This Age/Weight
(01) Rear facing
(02) Forward facing
(08) Other orientation (specify):
_____
(09) Unknown orientation

Designed For Forward Facing for This Age/Weight
(11) Rear facing
(12) Forward facing
(18) Other orientation (specify):
_____
(19) Unknown orientation

Unknown Design or Orientation For This Age/Weight, or Unknown Age/Weight
(21) Rear facing
(22) Forward facing
(28) Other orientation (specify):
_____
(29) Unknown orientation

(99) Unknown if child safety seat used

58. Child Safety Seat Harness Usage 0 0

59. Child Safety Seat Shield Usage 0 0

60. Child Safety Seat Tether Usage 0 0

Note: Options below applicable to Variables OA58-OA60.
(00) No child safety seat

Not Designed With Harness/Shield/Tether
(01) After market harness/shield/tether added, not used
(02) After market harness/shield/tether used
(03) Child safety seat used, but no after market harness/shield/tether added
(09) Unknown if harness/shield/tether added or used

Designed With Harness/Shield/Tether
(11) Harness/shield/tether not used
(12) Harness/shield/tether used
(19) Unknown if harness/shield/tether used

Unknown If Designed With Harness/Shield/Tether
(21) Harness/shield/tether not used
(22) Harness/shield/tether used
(29) Unknown if harness/shield/tether used

(99) Unknown if child safety seat used

INJURY CONSEQUENCES

61. Injury Severity (Police Rating) 4

(0) O - No injury
(1) C - Possible injury
(2) B - Nonincapacitating injury
(3) A - Incapacitating injury
(4) K - Killed
(5) U - Injury, severity unknown
(6) Died prior to accident
(9) Unknown

62. Treatment - Mortality 1
(0) No treatment
(1) Fatal
(2) Fatal - ruled disease (specify):

_____

Nonfatal
(3) Hospitalization
(4) Transported and released
(5) Treatment at scene - nontransported
(6) Treatment later
(7) Treatment - other (specify):

_____

(8) Transported to a medical facility-unknown if treated
(9) Unknown

63. Type Of Medical Facility (for Initial Treatment) X Ø
(0) Not treated at a medical facility
(1) Trauma center
(2) Hospital
(3) Medical clinic
(4) Physician's office
(5) Treatment later at medical facility
(8) Other (specify):

_____

(9) Unknown

64. Hospital Stay 00
(00) Not Hospitalized
____Code the number of days (up through 60) that the occupant stayed in hospital.
(61) 61 days or more
(99) Unknown

65. Working Days Lost 62
____Code the number of days (up through 60) that the occupant lost from work due to the accident
(00) No working days lost
(61) 61 days or more
(62) Fatally injured
(97) Not working prior to accident
(99) Unknown

STOP WORK HERE

VARIABLES 66-74

TO BE CODED BY THE ZONE CENTER

TO BE CODED BY THE ZONE CENTER

INJURY CONSEQUENCES

66. Time to Death 01
_____Code number of hours from time of accident to time of death up through 24 hours. If time of death is greater than 24 hours, code number of days. (Note: 1 day = 31, 2 days = 32, ... n days = 30 +n up through 30 days = 60)
(00) Not fatal
(96) Fatal - ruled disease
(99) Unknown

67. 1st Medically Reported Cause of Death 01

68. 2nd Medically Reported Cause of Death 08

69. 3rd Medically Reported Cause of Death 00
_____Code the Occupant Injury from line number(s) for the medically reported injury(s) which reportedly contributed to this occupant's death
(00) Not fatal or no additional causes
(96) Mode of death given but specific injuries are not linked to cause of death. (specify):
_____
(97) Other result (includes fatal ruled disease) (specify):
_____
(99) Unknown

70. Number of Recorded Injuries for This Occupant 08
_____Code the actual number of injuries recorded for this occupant.
(00) No recorded injuries
(97) Injured, details unknown
(99) Unknown if injured

TRAUMA DATA

71. Glasgow Coma Scale (GCS) Score (at Medical Facility) 01
(00) Not injured
(01) Injured - not treated at medical facility
(02) No GCS Score at medical facility
(03-15) Code the actual value of the initial GCS Score recorded at medical facility.
(97) Injured, details unknown
(99) Unknown if injured

72. Was the Occupant Given Blood? 1
(1) No - blood not given
(2) Yes - blood given
(specify units):_____
(9) Unknown if blood given

73. Arterial Blood Gases (ABG) – HCO_3 01
(00) Not injured
(01) Injured, ABGs not measured or reported
(02-50) Code the actual value of the HCO_3
(96) ABGs reported , HCO_3 unknown
(97) Injured, details unknown
(99) Unknown if injured

BELT USE DETERMINATION

74. Primary Source of Belt Use Determination 1
(0) Not equipped/not available/destroyed or rendered inoperative
(1) Vehicle inspection
(2) Official injury data
(3) Driver/occupant interview
(8) Other (specify):_____
(9) Unknown if belt used

U.S. Department of Transportation
National Highway Traffic Safety Administration

OCCUPANT INJURY FORM

Form Approved
O.M.B. No. 2127-0021
NATIONAL ACCIDENT SAMPLING SYSTEM
CRASHWORTHINESS DATA SYSTEM

1. Primary Sampling Unit Number	09	3. Vehicle Number	01
2. Case Number - Stratum	167A	4. Occupant Number	01

INJURY DATA

Record below the actual injuries sustained by this occupant that were identified from the official and unofficial data sources. Remember not to double count an injury just because it was identified from two different sources. If greater than ten injuries have been documented, encode the balance on the Occupant Injury Supplement.

	Source of Injury Data	A.I.S. - 90 Body Region	Type of Anatomic Structure	Specific Anatomic Structure	Level of Injury	A.I.S. Severity	Aspect	Injury Source	Injury Source Confidence Level	Direct/ Indirect Injury	Occupant Area Intrusion Number
1st	5. 1	6. 6	7. 5	8. 02	9. 06	10. 3	11. 6	12. 205	13. 3	14. 2	15. 00
2nd	16. 1	17. 2	18. 9	19. 74	20. 02	21. 1	22. 2	23. 205	24. 3	25. 2	26. 00
3rd	27. 1	28. 2	29. 9	30. 02	31. 02	32. 1	33. 7	34. 205	35. 3	36. 1	37. 00
4th	38. 1	39. 2	40. 9	41. 04	42. 02	43. 1	44. 7	45. 205	46. 3	47. 1	48. 00
5th	49. 1	50. 1	51. 9	52. 04	53. 02	54. 1	55. 5	56. 205	57. 3	58. 1	59. 00
6th	60. 1	61. 2	62. 5	63. 08	64. 00	65. 2	66. 9	67. 004	68. 3	69. 1	70. 00
7th	71. 1	72. 2	73. 5	74. 14	75. 06	76. 1	77. 8	78. 004	79. 3	80. 1	81. 00
8th	82. 1	83. 1	84. 4	85. 06	86. 20	87. 3	88. 3	89. 205	90. 3	91. 2	92. 00
9th	93.	94.	95.	96.	97.	98.	99.	100.	101.	102.	103.
10th	104.	105.	106.	107.	108.	109.	110.	111.	112.	113.	114.

atlanto-occipital dislocation
1 Deep contusion forehead
abrasion forehead
2 contusion subgaleal hemorrhage
mandible fx
3 short term avulsion
4 fingers cerebral contusions

It is believed that the air bag probably directed or propelled this occupant upwards to the roof. Injuries were reviewed by TS, DLH, ETB, WTP

HS Form 433B (1/95)

This report is authorized by P.L. 89-563, Title 1, Section 106, 108, and 112. While you are not required to respond, your cooperation is needed to make the results of this data collection effort comprehensive, accurate, and timely.

OCCUPANT INJURY DATA

	Source of Injury Data	A.I.S. - 90 Body Region	Type of Anatomic Structure	Specific Anatomic Structure	Level of Injury	A.I.S. Severity	Aspect	Injury Source	Injury Source Confidence Level	Direct/ Indirect Injury	Occupant Area Intrusion Number
11th											
12th											
13th											
14th											
15th											
16th											
17th											
18th											
19th											
20th											
21st											
22nd											
23rd											
24th											
25th											

OCCUPANT INJURY CLASSIFICATION

Body Region

(1) Head
(2) Face
(3) Neck
(4) Thorax
(5) Abdomen
(6) Spine
(7) Upper Extremity
(8) Lower Extremity
(9) Unspecified

Type of Anatomic Structure

(1) Whole Area
(2) Vessels
(3) Nerves
(4) Organs (includes Muscles/ligaments)
(5) Skeletal (includes joints)
(6) Head - LOC
(9) Skin

Specific Anatomic Structure

Vessels, Nerves, Organs, Bones, Joints are assigned consecutive two digit numbers beginning with 02.

The exceptions to this rule apply to:

Whole Area
(02) Skin - Abrasion
(04) Skin - Contusion
(06) Skin - Laceration
(08) Skin - Avulsion
(10) Amputation
(20) Burn
(30) Crush
(40) Degloving
(50) Injury - NFS
(90) Trauma, other than mechanical

Head - LOC
(02) Length of LOC

(04) Level
(06) of
(08) Consciousness

(10) Concussion

Spine
(02) Cervical
(04) Thoracic
(06) Lumbar

Level of Injury

Specific injuries are assigned consecutive two-digit numbers beginning with 02.

To the extent possible, within the organizational framework of the AIS, 00 is assigned to an injury NFS as to severity or where only one injury is given in the dictionary for that anatomic structure. 99 is assigned to any injury NFS as to lesion or severity.

Abbreviated Injury Scale

(1) Minor Injury
(2) Moderate Injury
(3) Serious Injury
(4) Severe Injury
(5) Critical Injury
(6) Maximum (untreatable)
(7) Injured, unknown severity

Aspect

(1) Right
(2) Left
(3) Bilateral
(4) Central
(5) Anterior
(6) Posterior
(7) Superior
(8) Inferior
(9) Unknown
(0) Whole region

SOURCE OF INJURY DATA

OFFICIAL RECORDS
(1) Autopsy records with or without hospital/medical records
(2) Hospital/medical records other than emergency room (e.g., discharge summary)
(3) Emergency room records only (including associated X-rays or other lab reports)
(4) Private physician, walk-in or emergency clinic

UNOFFICIAL RECORDS
(5) Lay coroner report
(6) E.M.S. personnel
(7) Interviewee
(8) Other source (specify): _____
(9) Police

INJURY SOURCE CONFIDENCE LEVEL

(1) Certain
(2) Probable
(3) Possible
(9) Unknown

DIRECT/INDIRECT INJURY

(1) Direct contact injury
(2) Indirect contact injury
(3) Noncontact injury
(7) Injured, unknown source

INJURY SOURCES

FRONT
(001) Windshield
(002) Mirror
(003) Sunvisor
(004) Steering wheel rim
(005) Steering wheel hub/spoke
(006) Steering wheel (combination of codes 004 and 005)
(007) Steering column, transmission selector lever, other attachment
(008) Cellular telephone or CB radio
(009) Add on equipment (e.g., tape deck, air conditioner)
(010) Left instrument panel and below
(011) Center instrument panel and below
(012) Right instrument panel and below
(013) Glove compartment door
(014) Knee bolster
(015) Windshield including one or more of the following: front header, A (A1/A2)-pillar, instrument panel, mirror, or steering assembly (driver side only)
(016) Windshield including one or more of the following: front header, A (A1/A2)-pillar, instrument panel, or mirror (passenger side only)
(017) Windshield reinforced by exterior object (specify) _____
(019) Other front object (specify): _____

LEFT SIDE
(051) Left side interior surface, excluding hardware or armrests
(052) Left side hardware or armrest
(053) Left A (A1/A2)-pillar
(054) Left B-pillar
(055) Other left pillar (specify): _____
(056) Left side window glass
(057) Left side window frame
(058) Left side window sill
(059) Left side window glass including one or more of the following: frame, window sill, A (A1/A2)-pillar, B-pillar, or roof side rail.
(060) Other left side object (specify): _____

RIGHT SIDE
(101) Right side interior surface, excluding hardware or armrests
(102) Right side hardware or armrest
(103) Right A (A1/A2)-pillar
(104) Right B-pillar
(105) Other right pillar (specify): _____
(106) Right side window glass
(107) Right side window frame
(108) Right side window sill
(109) Right side window glass including one or more of the following: frame, window sill, A (A1/A2)-pillar, B-pillar, or roof side rail.
(110) Other right side object (specify): _____

INTERIOR
(151) Seat, back support
(152) Belt restraint webbing/buckle
(153) Belt restraint B-pillar or door frame attachment point
(154) Other restraint system component (specify): _____
(155) Head restraint system
(160) Other occupants (specify): _____
(161) Interior loose objects
(162) Child safety seat (specify): _____
(163) Other interior object (specify): _____

AIR BAG
(170) Air bag-driver side
(171) Air bag-driver side and eyewear
(172) Air bag-driver side and jewelry
(173) Air bag-driver side and object held
(174) Air bag-driver side and object in mouth
(175) Air bag compartment cover-driver side
(176) Air bag compartment cover-driver side and eyewear
(177) Air bag compartment cover-driver side and jewelry
(178) Air bag compartment cover-driver side and object held
(179) Air bag compartment cover-driver side and object in mouth
(180) Air bag-passenger side
(181) Air bag-passenger side and eyewear
(182) Air bag-passenger side and jewelry
(183) Air bag-passenger side and object held
(184) Air bag-passenger side and object in mouth
(185) Air bag compartment cover-passenger side
(186) Air bag compartment cover-passenger side and eyewear
(187) Air bag compartment cover-passenger side and jewelry
(188) Air bag compartment cover-passenger side and object held
(189) Air bag compartment cover-passenger side and object in mouth
(190) Other air bag (specify) _____
(195) Other air bag compartment cover (specify) _____

ROOF
(201) Front header
(202) Rear header
(203) Roof left side rail
(204) Roof right side rail
(205) Roof or convertible top

FLOOR
(251) Floor (including toe pan)
(252) Floor or console mounted transmission lever, including console
(253) Parking brake handle
(254) Foot controls including parking brake

REAR
(301) Backlight (rear window)
(302) Backlight storage rack, door, etc.
(303) Other rear object (specify): _____

ADAPTIVE (ASSISTIVE) DRIVING EQUIPMENT
(401) Hand controls for braking/acceleration
(402) Steering control devices (attached to OEM steering wheel)
(403) Steering knob attached to steering wheel
(405) Replacement steering wheel (i.e., reduced diameter)
(406) Joy stick steering controls
(407) Wheelchair tie-downs
(408) Modification to seat belts, (specify): _____
(409) Additional or relocated switches, (specify): _____
(410) Raised roof
(411) Wall mounted head rest (used behind wheel chair)
(412) Other adaptive device (specify): _____

EXTERIOR of OCCUPANT'S VEHICLE
(451) Hood
(452) Outside hardware (e.g., outside mirror, antenna)
(453) Other exterior surface or tires (specify): _____
(454) Unknown exterior objects

EXTERIOR OF OTHER MOTOR VEHICLE
(501) Front bumper
(502) Hood edge
(503) Other front of vehicle (specify): _____
(504) Hood
(505) Hood ornament
(506) Windshield, roof rail, A-pillar
(507) Side surface
(508) Side mirrors
(509) Other side protrusions (specify): _____
(510) Rear surface
(511) Undercarriage
(512) Tires and wheels
(513) Other exterior of other motor vehicle (specify): _____
(514) Unknown exterior of other motor vehicle

OTHER VEHICLE OR OBJECT IN THE ENVIRONMENT
(551) Ground
(598) Other vehicle or object (specify): _____
(599) Unknown vehicle or object

NONCONTACT INJURY
(601) Fire in vehicle
(602) Flying glass
(603) Other noncontact injury source (specify): _____
(604) Air bag exhaust gases
(697) Injured, unknown source

OFFICIAL INJURY DATA — SOFT TISSUE INJURIES

Indicate the Location, Specific Anatomic Structure, Detail (size, depth, fracture type, head injury clinical signs and neurological deficits), and Source of all injuries indicated by official sources (or from PAR or other unofficial sources if medical records and interviewee data are unavailable.)

AUT: CAUSE OF DEATH: HEAD & NECK INJURIES

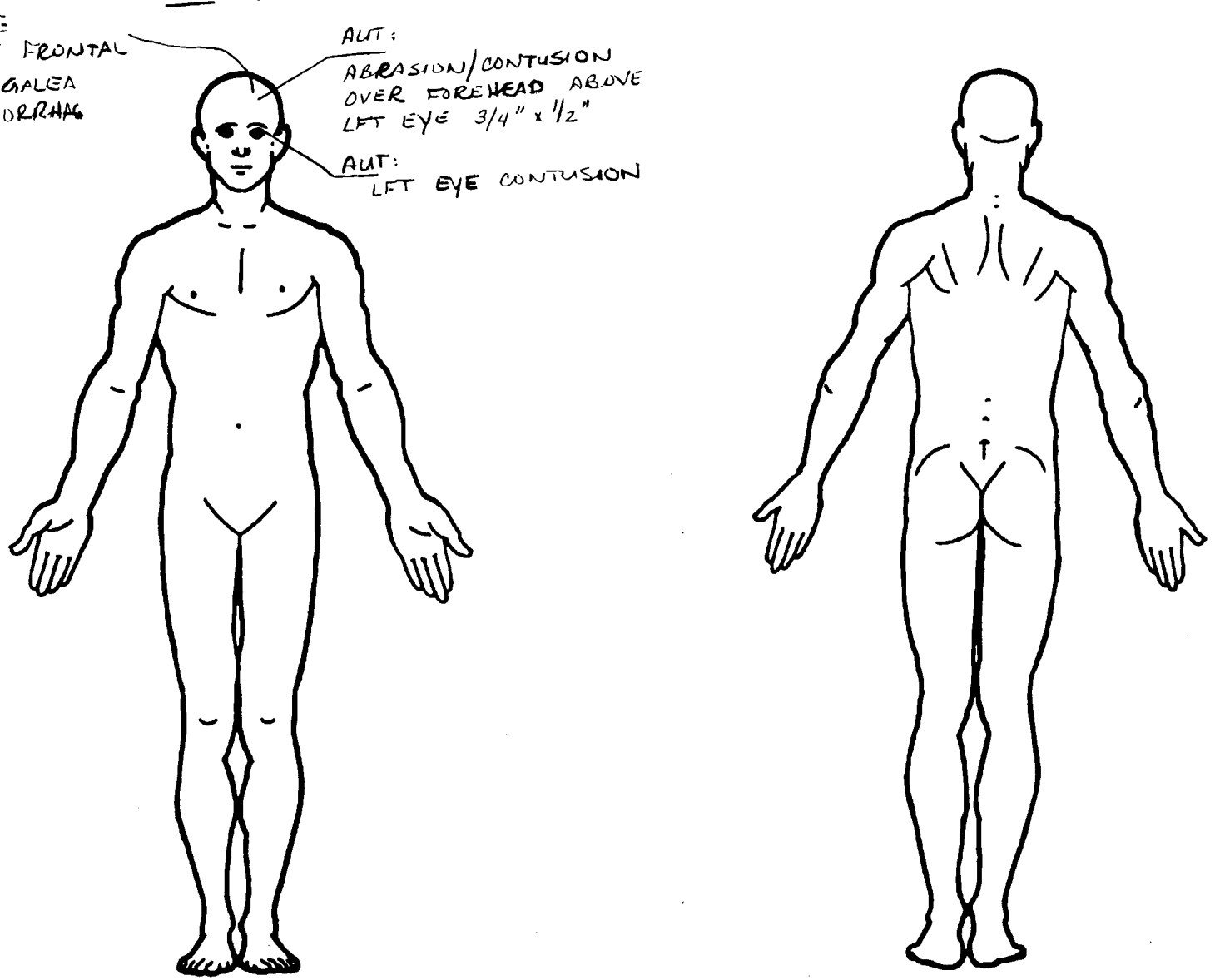

AUT:

OFFICIAL INJURY DATA — SKELETAL INJURIES

Restrained?

___ No

___ Yes

NOT RECORDED

Blood Alcohol Level (mg/dl)

BAL = .23

Glasgow Coma Scale Score

GCSS = ___

Units of Blood Given

Units = ___

Arterial Blood Gases

pH = ___

PO_2 = ___

PCO_2 ___

HCO_3 ___

NOT RECORDED

Indicate the Location, Specific Anatomic Structure, Detail (size, depth, fracture type, head injury clinical signs and neurological deficits), and Source of all injuries indicated by official sources (or from PAR or other unofficial sources if medical records and interviewee data are unavailable.)

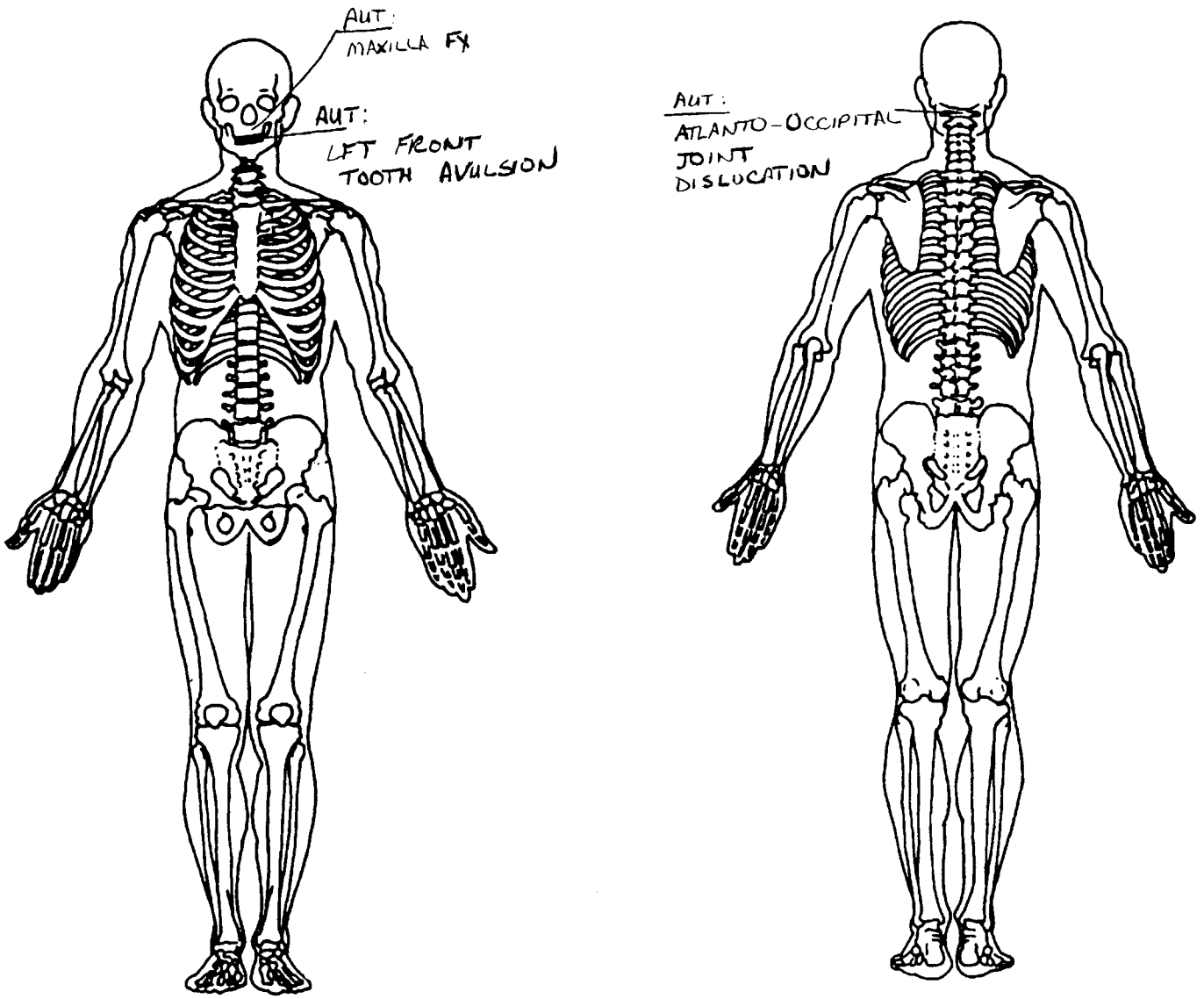

OFFICIAL INJURY DATA — INTERNAL INJURIES

Indicate the Location, Specific Anatomic Structure, Detail (size, depth, fracture type, head injury clinical signs and neurological deficits), and Source of all injuries indicated by official sources (or from PAR or other unofficial sources if medical records and interviewee data are unavailable.)

AIT:
GLIDING CONTUSIONS OF CEREBRAL WHITE MATTER (THROUGH OUT FRONTAL, PARIETAL, & OCCIPITAL LOBES)
2° ACCELERATION / DECELERATION TYPE INJURY

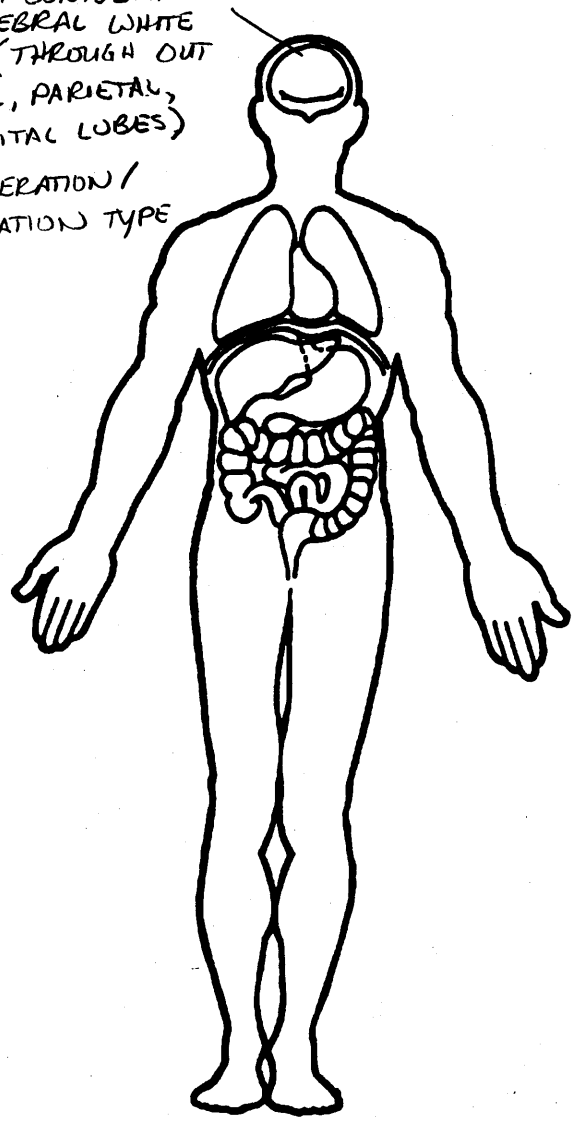

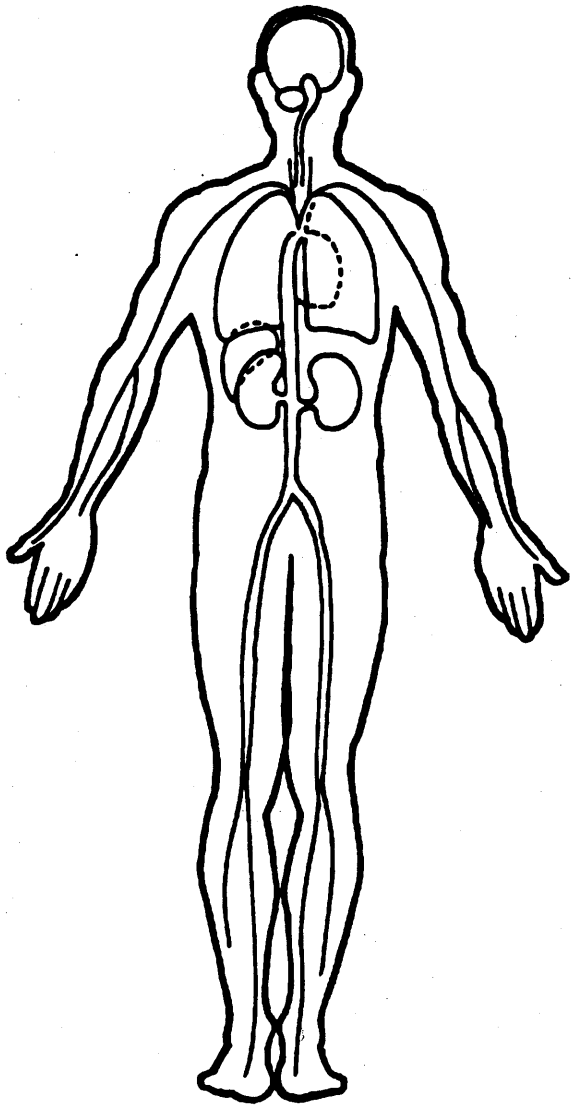

[redacted]

U.S. Department of Transportation
National Highway Traffic Safety Administration

UPDATE FORM

NATIONAL ACCIDENT SAMPLING SYSTEM
CRASHWORTHINESS DATA SYSTEM

1. Primary Sampling Unit Number: 09
2. Case Number — Stratum: 167A
3. Vehicle Number: 01
4. Occupant Number: 01

RECEIVED [redacted] 1996

Driver or Occupant Name: [redacted]

Address: [redacted]

Other Information: _____

(Sanitize this section prior to Update submission.)

STATUS OF OCCUPANT INFORMATION

		INITIAL SUBMISSION	UPDATED INFORMATION
OAL08.	Date Official Medical Data Requested	[redacted] 96	
OAL09.	Date Official Medical Data Obtained	[redacted] 96	
OAL16.	Injury Treatment Status		
OAL17.	Injury Information		
	Official		
a.	Autopsy (invasive examination)	B	11
b.	Post-ER medical record which includes information about death based on non-invasive examination	B	
c.	Admission record/summary or admission/discharge face sheet	B	
d.	Discharge summary	B	
e.	Operative report	B	
f.	Radiographic record(s) (X-ray, CT scan)	B	
g.	History and physical examination and/or consultation records	B	
h.	Emergency room records (includes nurses' notes)	B	
j.	Private physician	B	
	Unofficial		
k.	Lay coroner	B	
l.	EMS record	B	
m.	Interviewee	B	
n.	Other source (specify): _____	B	B
o.	Police report	B	B

		INITIAL SUBMISSION	UPDATED INFORMATION
OAL18.	Medical Facility Code	97	
GV14.	Alcohol Test Results For Driver	96	
GV16.	Other Drug Specimen Test Type For Driver	0	
OA05.	Occupant's Age	30	
OA06.	Occupant's Sex	1	
OA07.	Occupant's Height	183	
OA08.	Occupant's Weight	082	
OA61.	Treatment-Mortality	1	
OA62.	Type of Medical Facility (for Initial Treatment)	1	
OA63.	Hospital Stay	00	

PRECRASH ENVIRONMENTAL DATA

19. Relation To Interchange Or Junction — 1
    (0) Non-interchange area and non-junction
    (1) Interchange area related

    Non-Interchange junctions
    (2) Intersection related
    (3) Driveway, alley access related
    (4) Other junction (specify) _____
    (5) Unknown type of junction

    (9) Unknown

20. Trafficway Flow — 2
    (0) Not physically divided (two way traffic)
    (1) Divided trafficway-median strip without positive barrier
    (2) Divided trafficway-median strip with positive barrier
    (3) One way traffic
    (9) Unknown

21. Number Of Travel Lanes — 5
    (1) One
    (2) Two
    (3) Three
    (4) Four
    (5) Five
    (6) Six
    (7) Seven or more
    (9) Unknown

22. Roadway Alignment — 1
    (1) Straight
    (2) Curve right
    (3) Curve left
    (9) Unknown

23. Roadway Profile — 2
    (1) Level
    (2) Uphill grade (>2%)
    (3) Hill crest
    (4) Downhill grade (>2%)
    (5) Sag
    (9) Unknown

24. Roadway Surface Type — 2
    (1) Concrete
    (2) Bituminous (asphalt)
    (3) Brick or block
    (4) Slag, gravel, or stone
    (5) Dirt
    (8) Other (specify): _____
    (9) Unknown

25. Roadway Surface Condition — 1
    (1) Dry
    (2) Wet
    (3) Snow or slush
    (4) Ice
    (5) Sand, dirt, or oil
    (8) Other (specify): _____
    (9) Unknown

26. Light Conditions — 3
    (1) Daylight
    (2) Dark
    (3) Dark, but lighted
    (4) Dawn
    (5) Dusk
    (9) Unknown

27. Atmospheric Conditions — 0
    (0) No adverse atmospheric-related driving conditions
    (1) Rain
    (2) Sleet/hail
    (3) Snow
    (4) Fog
    (5) Rain and fog
    (6) Sleet and fog
    (7) Other (e.g., smog, smoke, blowing sand or dust, etc.) (specify): _____
    (9) Unknown

28. Traffic Control Device — 0
    (0) No traffic control(s)
    (1) Traffic control signal (not RR crossing)

    Regulatory
    (2) Stop sign
    (3) Yield sign
    (4) School zone sign
    (5) Other regulatory sign (specify): _____
    (6) Warning sign (not RR crossing)
    (7) Unknown sign
    (8) Miscellaneous/other controls including RR controls (specify): _____
    (9) Unknown

29. Traffic Control Device Functioning — 0
    (0) No traffic control device
    (1) Traffic control device not functioning (specify): _____
    (2) Traffic control device functioning properly
    (9) Unknown

OCCUPANT RELATED

37. Driver Presence in Vehicle — 1
(0) Driver not present
(1) Driver present
(9) Unknown

38. Number of Occupants This Vehicle — 01
(00-96) Code actual number of occupants for this vehicle
(97) 97 or more
(99) Unknown

39. Number of Occupant Forms Submitted — 01

AIR BAG RELATED

40. Is this an AOPS Vehicle? — 0
(0) No (includes unknown)
(1) Yes - researcher determined
(2) VIN determined air bag system
(3) VIN determined automatic (passive) belts
(4) VIN determined air bag and automatic (passive) belts

41. Air Bag(s) Deployment, First Seat Frontal — 0
(0) Not equipped or not available
(1) No air bags deployed

Single Air Bag Vehicle
(2) Driver air bag deployed
(3) Driver air bag, unknown if deployed

Multiple Air Bag Vehicle
(4) Driver side only deployed
(5) Passenger side only deployed
(6) Driver and passenger side deployed
(7) Driver and passenger side unknown if deployed
(8) Air bag(s) deployed, details unknown
(9) Unknown

42. Air Bag(s) Deployment, Other Than First Seat Frontal — 0
(0) Not equipped with an "other" air bag
(1) Deployed during accident (as a result of impact)
(2) Deployed inadvertently just prior to accident
(3) Deployed, details unknown
(4) Deployed as a result of a noncollision event during accident sequence (e.g., fire, explosion, electrical)
(5) Unknown if deployed
(7) Nondeployed
(9) Unknown

Specify type of "other" air bag present: _____

VEHICLE WEIGHT ITEMS

43. Vehicle Curb Weight — 0,98 0
____ Code weight to nearest 10 kilograms.
(045) Less than 450 kilograms
(610) 6,100 kilograms or more
(999) Unknown
2156 lbs X .4536 = ,978 kgs
Source: [redacted]

44. Vehicle Cargo Weight — 0,000
____ Code weight to nearest 10 kilograms.
(000) Less than 5 kilograms
(450) 4,500 kilograms or more
(999) Unknown
____ lbs X .4536 = ____ kgs
Source: [redacted]

ROLLOVER DATA

45. Rollover — 00
(00) No rollover (no overturning)

Rollover (primarily about the longitudinal axis)
(01-16) Code the number of quarter turns
(17) Rollover, 17 or more quarter turns (specify): _____
(98) Rollover--end-over-end (i.e., primarily about the lateral axis)
(99) Rollover (overturn), details unknown

46. Rollover Initiation Type — 00
(00) No rollover
(01) Trip-over
(02) Flip-over
(03) Turn-over
(04) Climb-over
(05) Fall-over
(06) Bounce-over
(07) Collision with another vehicle
(08) Other rollover initiation type specify): _____
(98) Rollover--end-over-end
(99) Unknown rollover initiation type

47. Location of Rollover Initiation — 0
(0) No rollover
(1) On roadway
(2) On shoulder—paved
(3) On shoulder—unpaved
(4) On roadside or divided trafficway median
(8) Rollover--end-over-end
(9) Unknown

48. Rollover Initiation Object Contacted — 00
(Note: Applicable codes on back of page)

49. Location on Vehicle Where Initial Principal Tripping Force Is Applied — 0
(0) No rollover
(1) Wheels/tires
(2) Side plane
(3) End plane
(4) Undercarriage
(5) Other location on vehicle (specify): _____
(6) Non-contact rollover forces (specify): _____
(8) Rollover--end-over-end
(9) Unknown

50. Direction of Initial Roll — 0
(0) No rollover
(1) Roll right - primarily about the longitudinal axis
(2) Roll left - primarily about the longitudinal axis
(8) Rollover--end-over-end
(9) Unknown roll direction

PS4 09-167A.
V-2

CODES FOR ROLLOVER INITIATION OBJECT CONTACTED

(00) No rollover
(01-30) — Vehicle Number

Noncollision
(31) Turn-over — fall-over
(32) No rollover impact initiation (end-over-end)
(34) Jackknife

Collision With Fixed Object
(41) Tree (≤ 10 cm in diameter)
(42) Tree (> 10 cm in diameter)
(43) Shrubbery or bush
(44) Embankment

(45) Breakaway pole or post (any diameter)

Nonbreakaway Pole or Post
(50) Pole or post (≤ 10 cm in diameter)
(51) Pole or post (> 10 cm but ≤ 30 cm in diameter)
(52) Pole or post (> 30 cm in diameter)
(53) Pole or post (diameter unknown)

(54) Concrete traffic barrier
(55) Impact attenuator
(56) Other traffic barrier (includes guardrail) (specify):_____

(57) Fence
(58) Wall
(59) Building
(60) Ditch or culvert
(61) Ground
(62) Fire hydrant
(63) Curb
(64) Bridge
(68) Other fixed object (specify):

(69) Unknown fixed object

Collision with Nonfixed Object
(70) Passenger car, light truck, van, or other vehicle not in-transport
(71) Medium/heavy truck or bus not in-transport
(76) Animal
(77) Train
(78) Trailer, disconnected in transport
(79) Object fell from vehicle in-transport
(88) Other nonfixed object (specify):

(89) Unknown nonfixed object

(98) Other event (specify):

(99) Unknown event or object

U.S. Department of Transportation
National Highway Traffic Safety Administration

EXTERIOR VEHICLE FORM

NATIONAL ACCIDENT SAMPLING SYSTEM
CRASHWORTHINESS DATA SYSTEM

1. Primary Sampling Unit Number: 09
2. Case Number - Stratum: 167A
3. Vehicle Number: 02

VEHICLE IDENTIFICATION

VIN: KMHLD21J9JV[redacted] Model Year: 88

Vehicle Make (specify): Hyundai Vehicle Model (specify): Excel GL

LOCATOR

Locate the end of the damage with respect to the vehicle longitudinal center line or bumper corner for end impacts or an undamaged axle for side impacts.

Specific Impact No.	Location of Direct Damage	Location of Field L	Location of Max Crush
02	Starts L/R corner → right	Entire Rear bumper	C2
03	Starts 44cm behind L/F	Starts 9cm behind L/F	C5
	wheel → forward	wheel → forward	

CRUSH PROFILE IN CENTIMETERS

NOTES: Identify the plane at which the C-measurements are taken (e.g., at bumper, above bumper, at sill, above sill, etc.) and label adjustments (e.g., free space).

Measure C1 to C6 from driver to passenger side in front or rear impacts and rear to front in side impacts.

Free space value is defined as the distance between the baseline and the original body contour taken at the individual C locations. This may include the following: bumper lead, bumper taper, side protrusion, side taper, etc. Record the value for each C-measurement and maximum crush.

Use as many lines/columns as necessary to describe each damage profile.

Specific Impact Number	Plane of Impact C-Measurements	Direct Damage Width (CDC)	Direct Damage Max Crush	Field L	C_1	C_2	C_3	C_4	C_5	C_6	±D
02	Rear Bumper	96	C2	139	36	34	31	29	26	30	-27
	Free space				5	1	0	0	1	5	
	Bumper Width				-18	-18	-18	-18	-18	-18	
02	Final	96	C2	139	13	15	13	11	7	7	-27
03	Above Fender	34	C5	82	13	14	15	16	17	16	+/27
	Free space				2	3	3	3	4	6	
	Struts Pulled out 10cm				10	10	10	10	10	10	
03	Final	34	C5	82	1	1	2	3	3	0	+/27

ORIGINAL SPECIFICATIONS WORK SHEET

Wheelbase	93.7	inches	x	2.54	=	238 cm
Overall Length	161.0	inches	x	2.54	=	409 cm
Maximum Width	63.1	inches	x	2.54	=	160 cm
Curb Weight	2,156	pounds	x	.4536	=	978 kg
Average Track	53.5	inches	x	2.54	=	136 cm
Front Overhang	___.___	inches	x	2.54	=	___ cm
Rear Overhang	___.___	inches	x	2.54	=	___ cm
Undeformed End Width	___.___	inches	x	2.54	=	___ cm
Engine Size: cyl./displ.	____	cc	x	.001	=	1.5 L
	___	CID	x	.0164	=	___.___ L

VEHICLE DAMAGE SKETCH

TIRE–WHEEL DAMAGE

a. Rotation physically restricted		b. Tire deflated	
RF	2	RF	2
LF	2	LF	2
RR	2	RR	2
LR	2	LR	1

(1) Yes (2) No (8) NA (9) Unk.

TYPE OF TRANSMISSION

☐ Manual ☒ Automatic

END SHIFT ≥ 10 CM

☐ Yes ☒ No

ORIGINAL SPECIFICATIONS

Wheelbase	238	cm
Overall Length	409	cm
Maximum Width	160	cm
Curb Weight	978	kg
Average Track	136	cm
Front Overhang (fuel filler)	84	cm
Rear Overhang (fuel filler)	87	cm
Undeformed End Width	145 [48.3°]	cm
Engine Size: cyl./displ.	1.5	L

WHEEL STEER ANGLES

(For locked front wheels or displaced rear axles only)

RF ± ° LF ± ° RR ± ° LR ± °

Within ± 5 degrees

DRIVE WHEELS

☒ FWD ☐ RWD ☐ 4WD

Approximate Cargo Weight 0 kg

MEASUREMENTS IN CENTIMETERS

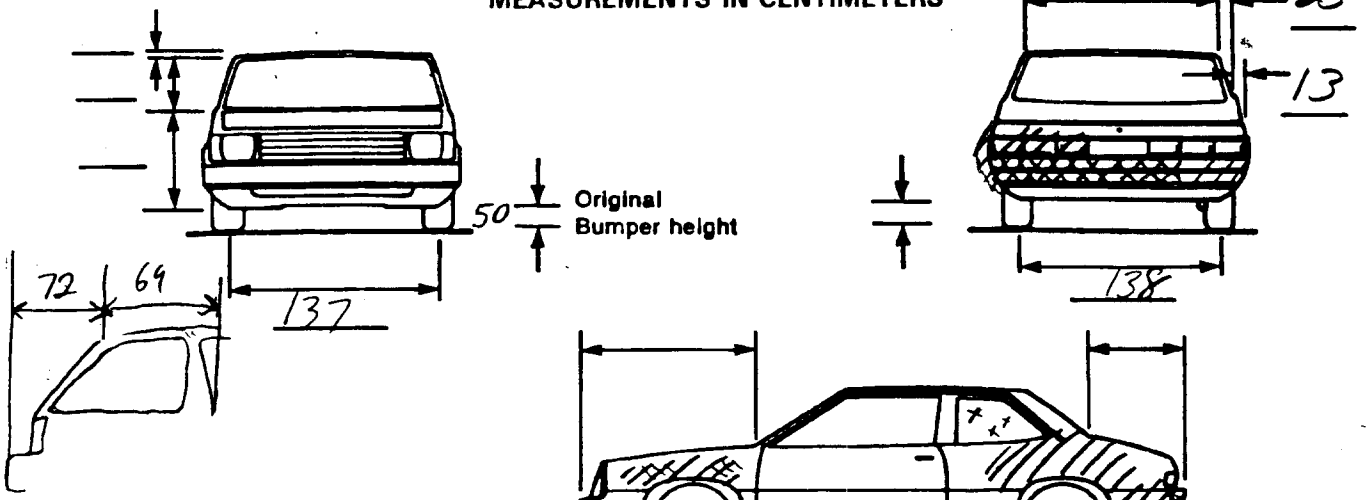

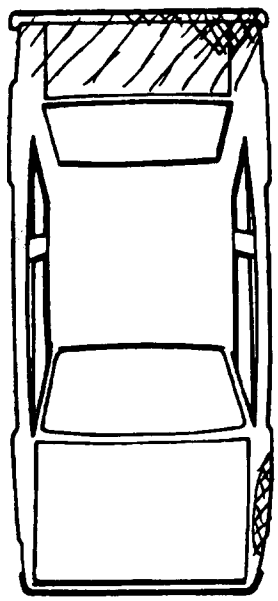

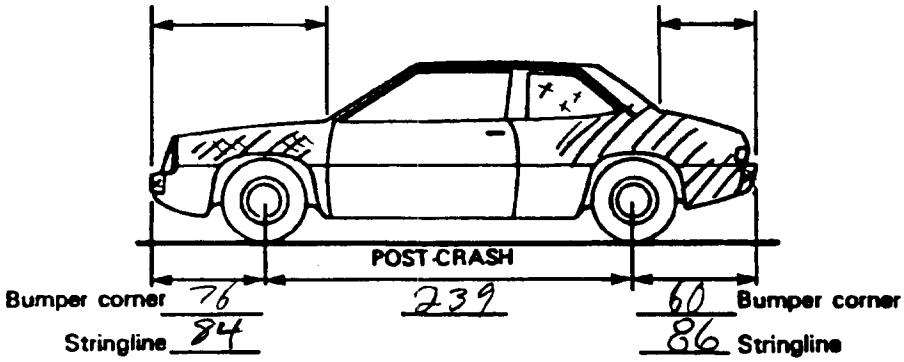

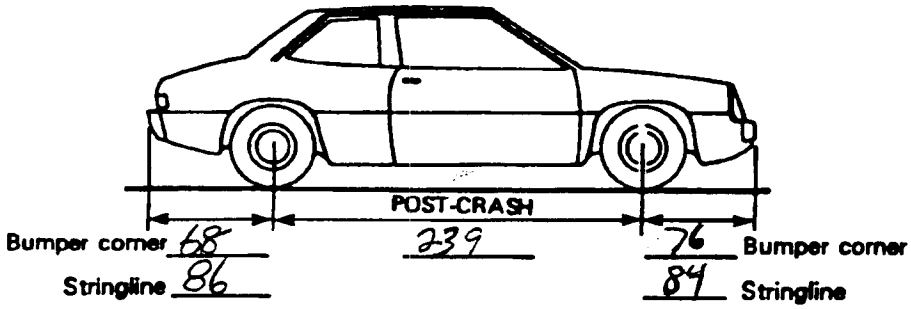

NOTES: Sketch new perimeter and cross hatch direct damage and single hatch induced damage on all views. Annotate observations which might be useful in reconstructing the accident (e.g., grass in tire bead, direction of striations, scuff on sidewalls, etc.). If pulling trailer, sketch type of trailer and damage received on the back of this page.

Annotate any damage caused by extrication such as component removal by torching, prying, or hydraulic shears.

CDC WORKSHEET

CODES FOR OBJECT CONTACTED

(01-30) — Vehicle Number

Noncollision
- (31) Overturn — rollover (excludes end-over-end)
- (32) Rollover—end-over-end
- (33) Fire or explosion
- (34) Jackknife
- (35) Other intraunit damage (specify): _____
- (36) Noncollision injury
- (38) Other noncollision (specify): _____
- (39) Noncollision — details unknown

Collision With Fixed Object
- (41) Tree (≤ 10 cm in diameter)
- (42) Tree (> 10 cm in diameter)
- (43) Shrubbery or bush
- (44) Embankment
- (45) Breakaway pole or post (any diameter)

Nonbreakaway Pole or Post
- (50) Pole or post (≤ 10 cm in diameter)
- (51) Pole or post (> 10 cm but ≤ 30 cm in diameter)
- (52) Pole or post (> 30 cm in diameter)
- (53) Pole or post (diameter unknown)
- (54) Concrete traffic barrier
- (55) Impact attenuator
- (56) Other traffic barrier (includes guardrail) (specify): _____
- (57) Fence
- (58) Wall
- (59) Building
- (60) Ditch or culvert
- (61) Ground
- (62) Fire hydrant
- (63) Curb
- (64) Bridge
- (68) Other fixed object (specify): _____
- (69) Unknown fixed object

Collision with Nonfixed Object
- (70) Passenger car, light truck, van, or other vehicle not in-transport
- (71) Medium/heavy truck or bus not in-transport
- (72) Pedestrian
- (73) Cyclist or cycle
- (74) Other nonmotorist or conveyance
- (75) Vehicle occupant
- (76) Animal
- (77) Train
- (78) Trailer, disconnected in transport
- (79) Object fell from vehicle in-transport
- (88) Other nonfixed object (specify): _____
- (89) Unknown nonfixed object
- (98) Other event (specify): _____
- (99) Unknown event or object

DEFORMATION CLASSIFICATION BY EVENT NUMBER

Accident Event Sequence Number	Object Contacted	(1) (2) Direction of Force (degrees)	Incremental Value of Shift	(3) Deformation Location	(4) Specific Longitudinal or Lateral Location	(5) Specific Vertical or Lateral Location	(6) Type of Damage Distribution	(7) Deformation Extent
02	01	210	00	B	Y	L	W	02
03	01	240	00	L	F	M	N	01

COLLISION DEFORMATION CLASSIFICATION

HIGHEST DELTA "V"

no lateral movement

Accident Event Sequence Number	Object Contacted	(1) (2) Direction of Force	(3) Deformation Location	(4) Longitudinal or Lateral Location	(5) Vertical or Lateral Location	(6) Type of Damage Distribution	(7) Deformation Extent
4. 02	5. 01	6. ~~07~~ 06	7. B	8. Y	9. L	10. W	11. 02

NASS CODING CHANGE
1st Review: 1F
2nd Review:

Second Highest Delta "V"

12.	13.	14.	15.	16.	17.	18.	19.
03	01	08	L	F	M	N	01

CRUSH PROFILE IN CENTIMETERS

The crush profile for the damage described in the CDC(s) above should be documented in the appropriate space below. (ALL MEASUREMENTS ARE IN CENTIMETERS.)

HIGHEST DELTA "V"

20. L	21. C_1	C_2	C_3	C_4	C_5	C_6	22. ±D
145	013	015	013	011	007	007	±027

Second Highest Delta "V"

23. L	24. C_1	C_2	C_3	C_4	C_5	C_6	25. ±D
082	001	001	002	003	003	000	±127

26. Undeformed End Width (Coded when highest severity impact is an end plane impact.) 145
- ____ Code to the nearest centimeter
- (250) 250 centimeters or more
- (998) No highest severity end plane impact
- (999) Unknown

27. Direct Damage Width (For highest severity impact) 096
- ____ Code to the nearest centimeter
- (250) 250 centimeters or more
- (999) Unknown

28. Original Wheelbase 238
- ____ Code to the nearest centimeter
- (650) 650 centimeters or more
- (999) Unknown

93.7 inches X 2.54 = 238 centimeters

29. Original Average Track Width 136
- ____ Code to the nearest centimter
- (185) 185 centimeters or more
- (999) Unknown

53.5 inches X 2.54 = 136 centimeters

30. Are CDCs Documented but Not Coded on The Automated File? 0
(0) No
(1) Yes

31. Researcher's Assessment of Vehicle Disposition 1
(0) Not towed due to vehicle damage
(1) Towed due to vehicle damage
(9) Unknown

32. Is This A Multi-Stage Manufactured Vehicle And/Or A Certified Altered Vehicle? 0
(0) No post manufacturer modifications
(1) Yes - post manufacturer modifications (specify): _____
_____
_____
(Include photograph of CERTIFICATION PLACARD in case report)
(9) Unknown if vehicle is modified

FIRE OCCURRENCE

33. Fire Occurrence 0
(0) No fire

Yes, fire occurred
(1) Minor
(2) Major
(9) Unknown

34. Origin of Fire 0
(0) No fire
(1) Vehicle exterior (front, side, back, top)
(2) Exhaust system
(3) Fuel tank (and other fuel retention system parts)
(4) Engine compartment
(5) Cargo/trunk compartment
(6) Instrument panel
(7) Passenger compartment area
(8) Other location (specify):
_____
(9) Unknown

FUEL SYSTEM

35. Location of Fuel Tank-1 Filler Cap 2
36. Location of Fuel Tank-2 Filler Cap 0
(0) No fuel tank
(1) On back plane
(2) Aft of center of the rear wheels (rear axle) on left side plane
(3) Aft of center of the rear wheels (rear axle) on right side plane
(4) Forward of center of the rear wheels (rear axle) on left side plane
(5) Forward of center of the rear wheels (rear axle) on right side plane
(6) Over the center of the rear wheels (rear axle) on left side plane
(7) Over the center of the rear wheels (rear axle) on right side plane
(8) Other (specify):_____
(9) Unknown

37. Type of Fuel Tank-1 1
38. Type of Fuel Tank-2 0
(0) No fuel tank (electrical vehicle)
(1) Metallic
(2) Non-metallic
(9) Unknown

39. Location of Fuel Tank-1 7
40. Location of Fuel Tank-2 0
(0) No fuel tank
(1) Aft of center of the rear wheels (rear axle) centered
(2) Aft of center of the rear wheels (rear axle) left side
(3) Aft of center of the rear wheels (rear axle) right side
(4) Forward of center of the rear wheels (rear axle) centered
(5) Forward of center of the rear wheels (rear axle) left side
(6) Forward of center of the rear wheels (rear axle) right side
(7) Over center of the rear wheels (rear axle)
(8) Other (specify):_____
(9) Unknown

41. Damage to Fuel Tank-1 1
42. Damage to Fuel Tank-2 0
(0) No fuel tank
(1) No damage to fuel tank
(2) Deformed, no seam failure
(3) Deformed, with a seam failure
(4) Punctured
(5) Lacerated (ripped)
(6) Abraded (scraped)
(7) Filler neck separation from the fuel tank
(8) Other damage (specify):_____
(9) Unknown

43. Leakage Location of Fuel System-1 1

44. Leakage Location of Fuel System-2 0
(0) No fuel tank
(1) No fuel leakage

Primary Area Of Leakage
(2) Tank
(3) Filler neck
(4) Cap
(5) Lines/pump/filter
(6) Vent/emission recovery
(8) Other (specify):_____
(9) Unknown

45. Fuel Type-1 01

46. Fuel Type-2 00

Single Fuel Type
(00) No fuel tank
(01) Gasoline
(02) Diesel
(03) CNG (Compressed Natural Gas)
(04) LPG (Liquid Petroleum Gas) also known as Propane
(05) LNG (Liquid Natural Gas)
(06) Methanol (M100 or M85)
(07) Ethanol (E100 or E85)
(08) Other (Hydrogen or others) (specify):
_____

Electric Powered or Electric/Solar Powered Vehicles
(10) Lead Acid Battery
(11) Nickel-Iron Battery
(12) Nickel-Cadmium Battery
(13) Sodium Metal Chloride Battery
(14) Sodium Sulfur Battery
(18) Other (Specify):_____

(98) Other Hybrid (specify):
_____

(99) Unknown fuel type

47. Is This Vehicle Equipped With More Than Two Fuel Tanks? 0
(0) No (one or two tanks only)

Yes - More Than Two Tanks
(1) Yes -- no damage to any tank or filler cap and no fuel system leakage
(2) Yes -- no damage to any tank or filler cap but there is fuel system leakage (specify leakage location):
_____
(3) Yes -- damage to an additional tank or filler cap and there is fuel system leakage (specify the following):
Type of tank _____
Tank location _____
Filler cap location _____
Tank damage _____
Location of leakage _____
Type of fuel _____
(9) Unknown if more than two tanks

COMMENTS

*** STOP: IF THE CDS APPLICABLE VEHICLE WAS NOT TOWED ***

(GV10=0)

DO NOT COMPLETE THE INTERIOR VEHICLE FORM.

U.S. Department of Transportation
National Highway Traffic Safety Administration

INTERIOR VEHICLE FORM

NATIONAL ACCIDENT SAMPLING SYSTEM
CRASHWORTHINESS DATA SYSTEM

1. Primary Sampling Unit Number: 09
2. Case Number - Stratum: 167A
3. Vehicle Number: 02

INTEGRITY

4. Passenger Compartment Integrity: 06
(00) No integrity loss

Yes, Integrity Was Lost Through
(01) Windshield
(02) Door (side)
(03) Door/hatch (back door)
(04) Roof
(05) Roof glass
(06) Side window
(07) Rear window (backlight)
(08) Roof and roof glass
(09) Windshield and door (side)
(10) Windshield and roof
(11) Side and rear window (side window and backlight)
(12) Windshield and side window
(13) Door and side window
(98) Other combination of above (specify):

(99) Unknown

Door, Tailgate or Hatch Opening

5. LF 3 6. RF 1 7. LR 0 8. RR 0 9. TG/H 1

(0) No door/gate/hatch
(1) Door/gate/hatch remained closed and operational
(2) Door/gate/hatch came open during collision
(3) Door/gate/hatch jammed shut
(8) Other (specify):

(9) Unknown

Damage/Failure Associated with Door, Tailgate or Hatch Opening in Collision. If IV05-IV09 ≠ 2, Then code 0

10. LF 0 11. RF 0 12. LR 0 13. RR 0 14. TG/H 0

(0) No door/gate/hatch or door not opened

Door, Tailgate or Hatch Came Open During Collision
(1) Door operational (no damage)
(2) Latch/striker failure due to damage
(3) Hinge failure due to damage
(4) Door structure failure due to damage
(5) Door support (i.e., pillar, sill, roof side rail, etc.) failure due to damage
(6) Latch/striker and hinge failure due to damage
(8) Other failure (specify):

(9) Unknown

GLAZING

Type of Window/Windshield Glazing

15. WS 1 16. LF 2 17. RF 2 18. LR 2 19. RR 2
20. BL 2 21. Roof 0 22. Other 0

(0) No glazing
(1) AS-1 — Laminated
(2) AS-2 — Tempered
(3) AS-3 — Tempered-tinted (original)
(4) AS-2 — Tempered-with after market tint
(5) AS-3 — Tempered-tinted (with additional after market tint)
(6) AS-14 — Glass/Plastic
(7) Glazing removed prior to accident
(8) Other (specify):

(9) Unknown

Window Precrash Glazing Status

23. WS 1 24. LF 4 25. RF 2 26. LR 2 27. RR 2
28. BL 1 29. Roof 0 30. Other 0

(0) No glazing
(1) Fixed
(2) Closed
(3) Partially opened
(4) Fully opened
(7) Glazing removed prior to accident
(9) Unknown

Glazing Damage from Impact Forces

31. WS 1 32. LF 1 33. RF 1 34. LR 6 35. RR 1
36. BL 1 37. Roof 0 38. Other 0

(0) No glazing
(1) No glazing damage from impact forces
(2) Glazing in place and cracked from impact forces
(3) Glazing in place and holed from impact forces
(4) Glazing out-of-place (cracked or not) and not holed from impact forces
(5) Glazing out-of-place and holed from impact forces
(6) Glazing disintegrated from impact forces
(7) Glazing removed prior to accident
(9) Unknown if damaged

Glazing Damage from Occupant Contact

39. WS 1 40. LF 1 41. RF 1 42. LR 1 43. RR 1
44. BL 1 45. Roof 0 46. Other 0

(0) No glazing
(1) No occupant contact to glazing
(2) Glazing contacted by occupant but no glazing damage
(3) Glazing in place and cracked by occupant contact
(4) Glazing in place and holed by occupant contact
(5) Glazing out-of-place (cracked or not) by occupant contact and not holed by occupant contact
(6) Glazing out-of-place by occupant contact and holed by occupant contact
(7) Glazing removed prior to accident
(8) Glazing disintegrated by occupant contact
(9) Unknown if contacted by occupant

INTRUSION WORKSHEET

Note: Sketch intruded areas

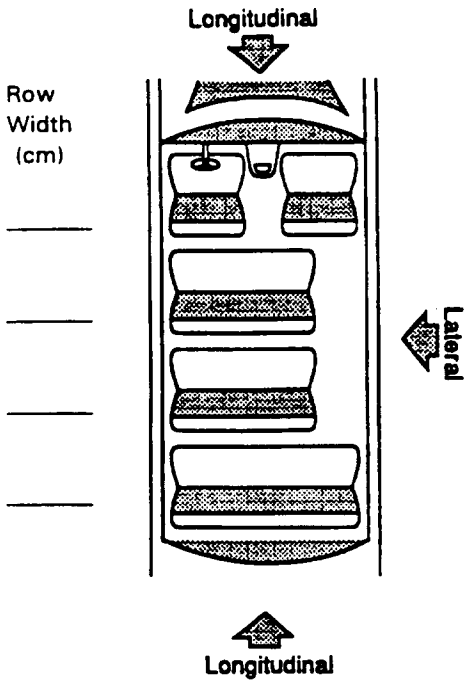

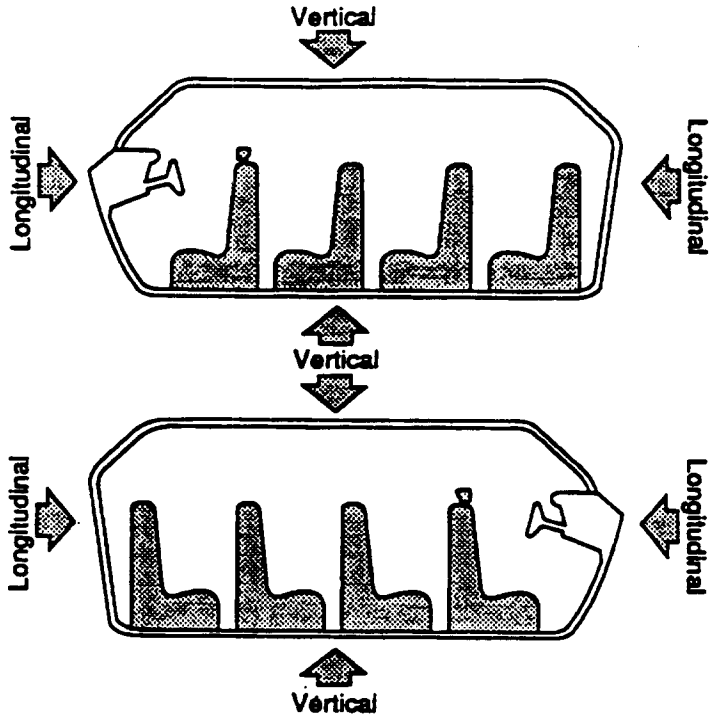

LOCATION OF INTRUSION	INTRUDED COMPONENT	(All Measurements Are In Centimeters) COMPARISON VALUE	—	INTRUDED VALUE	=	INTRUSION	DOMINANT CRUSH DIRECTION
			—		=		
			—		=		
			—		=		
			—		=		
			—		=		
			—		=		
			—		=		
			—		=		
			—		=		
			—		=		
			—		=		
			—		=		
			—		=		
			—		=		
			—		=		

NONE

Document no more than the 15 most severe intrusions

OCCUPANT AREA INTRUSION

Note: If no intrusions, leave variables IV47-IV86 blank.

	Location of Intrusion	Intruding Component	Magnitude of Intrusion	Dominant Crush Direction
1st	47.___ ___	48.___ ___	49.___	50.___
2nd	51.___ ___	52.___ ___	53.___	54.___
3rd	55.___ ___	56.___ ___	57.___	58.___
4th	59.___ ___	60.___ ___	61.___	62.___
5th	63.___ ___	64.___ ___	65.___	66.___
6th	67.___ ___	68.___ ___	69.___	70.___
7th	71.___ ___	72.___ ___	73.___	74.___
8th	75.___ ___	76.___ ___	77.___	78.___
9th	79.___ ___	80.___ ___	81.___	82.___
10th	83.___ ___	84.___ ___	85.___	86.___

LOCATION OF INTRUSION

Front Seat
- (11) Left
- (12) Middle
- (13) Right

Second Seat
- (21) Left
- (22) Middle
- (23) Right

Third Seat
- (31) Left
- (32) Middle
- (33) Right

Fourth Seat
- (41) Left
- (42) Middle
- (43) Right

- (97) Catastrophic
- (98) Other enclosed area (specify) _____
- (99) Unknown

INTRUDING COMPONENT

Interior Components
- (01) Steering assembly
- (02) Instrument panel left
- (03) Instrument panel center
- (04) Instrument panel right
- (05) Toe pan
- (06) A (A1/A2)-pillar
- (07) B-pillar
- (08) C-pillar
- (09) D-pillar
- (10) Side panel - forward of the A1/A2-pillar
- (11) Door panel (side)
- (12) Side panel - rear of the B-pillar
- (13) Roof (or convertible top)
- (14) Roof side rail
- (15) Windshield
- (16) Windshield header
- (17) Window frame
- (18) Floor pan (includes sill)
- (19) Backlight header
- (20) Front seat back
- (21) Second seat back
- (22) Third seat back
- (23) Fourth seat back
- (24) Fifth seat back
- (25) Seat cushion
- (26) Back door/panel (e.g., tailgate)
- (27) Other interior component (specify): _____

Exterior Components
- (30) Hood
- (31) Outside surface of this vehicle (specify): _____
- (32) Other exterior object in the environment (specify): _____
- (33) Unknown exterior object
- (97) Catastrophic
- (98) Intrusion of unlisted component(s) (specify): _____
- (99) Unknown

MAGNITUDE OF INTRUSION

- (1) ≥ 3 centimeters but < 8 centimeters
- (2) ≥ 8 centimeters but < 15 centimeters
- (3) ≥ 15 centimeters but < 30 centimeters
- (4) ≥ 30 centimeters but < 46 centimeters
- (5) ≥ 46 centimeters but < 61 centimeters
- (6) ≥ 61 centimeters
- (7) Catastrophic
- (9) Unknown

DOMINANT CRUSH DIRECTION

- (1) Vertical
- (2) Longitudinal
- (3) Lateral
- (7) Catastrophic
- (9) Unknown

STEERING RIM/SPOKE DEFORMATION

(All Measurements Are in Centimeters)

COMPARISON VALUE	—	DAMAGE VALUE	=	DEFORMATION
	—		=	
	—		=	
	—		=	
	—		=	

STEERING COLUMN

87. Steering Column Type 1
(1) Fixed column
(2) Tilt column
(3) Telescoping column
(4) Tilt and telescoping column
(8) Other column type (specify): _____
(9) Unknown

88. Tilt Steering Column Adjustment 0
(0) No tilt steering column
(1) Full up
(2) Between full up and center
(3) Center
(4) Between center and full down
(5) Full down
(9) Unknown

89. Telescoping Steering Column Adjustment 0
(0) No telescoping steering column
(1) Full back
(2) Between full back and midpoint
(3) Midpoint
(4) Between midpoint and full forward
(5) Full forward
(9) Unknown

90. Steering Rim/Spoke Deformation 0 0
____Code actual measured deformation to the nearest centimeter
(00) No steering rim deformation
(01-14) Actual measured value in centimeters
(15) 15 centimeters or more
(98) Observed deformation cannot be measured
(99) Unknown

91. Location of Steering Rim/Spoke Deformation 0 0
(00) No steering rim deformation

Quarter Sections
(01) Section A
(02) Section B
(03) Section C
(04) Section D

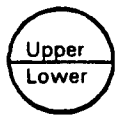

Half Sections
(05) Upper half of rim/spoke
(06) Lower half of rim/spoke
(07) Left half of rim/spoke
(08) Right half of rim/spoke

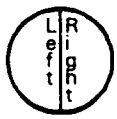

(09) Complete steering wheel collapse
(10) Undetermined location
(99) Unknown

INSTRUMENT PANEL

92. Odometer Reading 130,000
____ kilometers
Code to the nearest 1,000 kilometers
(000) No odometer
(001) Less than 1,500 kilometers
(500) 499,500 kilometers or more
(999) Unknown
80.509 miles X 1.6093 = 129.563 kilometers
Source: [redacted]

93. Instrument Panel Damage from Occupant Contact? 0
(0) No
(1) Yes
(9) Unknown

94. Type of Knee Bolster Covering 0
(0) No knee bolster
(1) Padded
(2) Rigid plastic
(8) Other (specify): _____
(9) Unknown

95. Knee Bolsters Deformed from Occupant Contact? 0
(0) No knee bolster
(1) No deformation
(2) Yes - deformation
(9) Unknown

96. Did Glove Compartment Door Open During Collision(s)? 1
(0) No glove compartment door
(1) No - door did not open
(2) Yes - door opened
(9) Unknown

97. Adaptive (Assistive) Driving Equipment 0
(0) No adaptive driving equipment
(1) Adaptive driving equipment installed
(Check all that apply.)
[ ] Hand controls for braking/acceleration
[ ] Steering control devices (attached to OEM steering wheel
[ ] Steering knob attached to steering wheel
[ ] Low effort power steering (unit or device)
[ ] Replacement steering wheel (i.e., reduced diameter)
[ ] Joy-stick steering controls
[ ] Wheelchair tie-downs
[ ] Modification to seat belts (specify): _____
[ ] Additional or relocated switches (specify): _____
[ ] Raised roof
[ ] Wall-mounted head rest (used behind wheelchair)
[ ] Other adaptive device (specify): _____
(9) Unknown

VEHICLE INTERIOR SKETCHES

Note area of ejection/entrapment

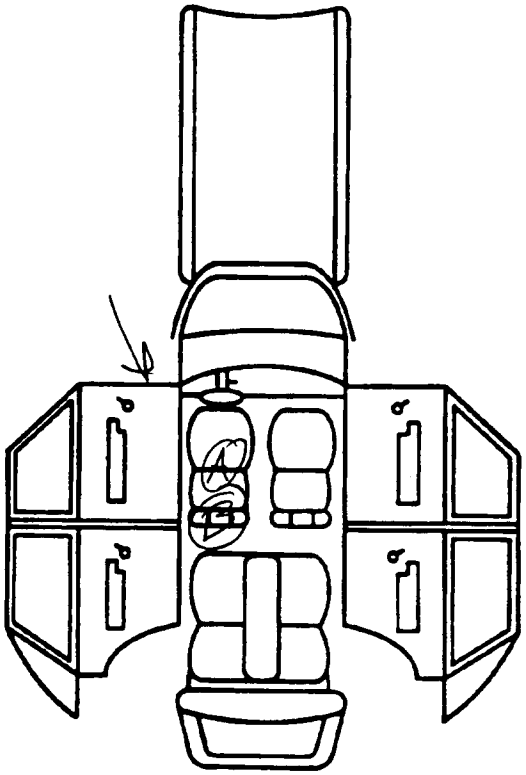

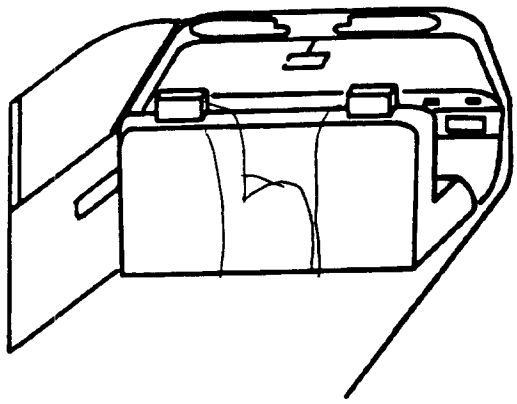

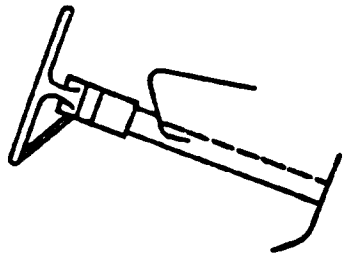

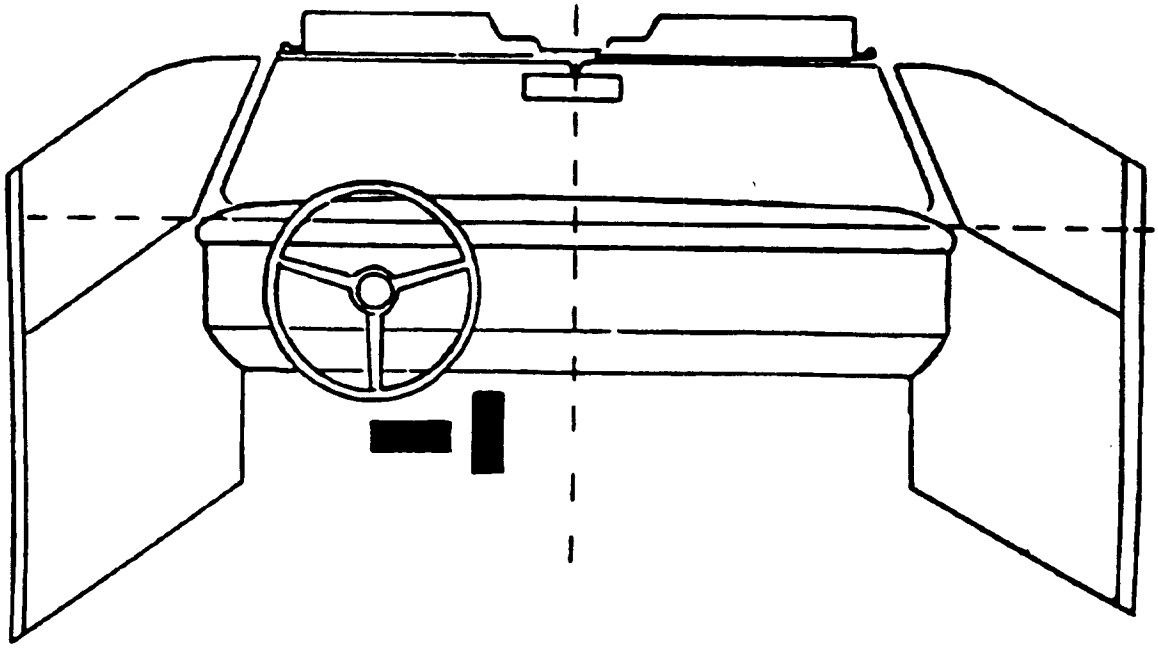

Sketch windshield contact(s) and the damaged area(s) on the instrument panel outline (e.g., radio, glove compartment, damage to instrument panel structure.
Cross hatch contact points, draw spider webs or use other annotation as may be appropriate.
Annotate the contacted area with a letter (begin with A) and list on the Points of Occupant Contact page.

POINTS OF OCCUPANT CONTACT

Contact	Interior Component Contacted	Occupant No. If Known	Body Region If Known	Supporting Physical Evidence	Confidence Level of Contact Point
A	151	01	back	Seat broke backwards	1
B	155	01	head	Seat broken + PDOF	1
C					
D					
E					
F					
G					
H					
I					
J					
K					
L					
M					
N					

CODES FOR INTERIOR COMPONENTS

FRONT
(001) Windshield
(002) Mirror
(003) Sunvisor
(004) Steering wheel rim
(005) Steering wheel hub/spoke
(006) Steering wheel (combination of codes 004 and 005)
(007) Steering column,transmission selector lever, other attachment
(008) Cellular telephone or CB radio
(009) Add on equipment(e.g., tape deck, air conditioner)
(010) Left instrument panel and below
(011) Center instrument panel and below
(012) Right instrument panel and below
(013) Glove compartment door
(014) Knee bolster
(015) Windshield including one or more of the following: front header, A (A1/A2)-pillar, instrument panel, mirror, or steering assembly (driver side only)
(016) Windshield including one or more of the following: front header, A (A1/A2)-pillar, instrument panel, or mirror (passenger side only)
(017) Windshield reinforced by exterior object, (specify): _____
(019) Other front object (specify): _____

LEFT SIDE
(051) Left side interior surface, excluding hardware or armrests
(052) Left side hardware or armrest
(053) Left A (A1/A2)-pillar
(054) Left B-pillar
(055) Other left pillar (specify): _____
(056) Left side window glass
(057) Left side window frame
(058) Left side window sill
(059) Left side window glass including one or more of the following: frame, window sill, A (A1/A2)-pillar, B-pillar, or roof side rail.
(060) Other left side object (specify): _____

RIGHT SIDE
(101) Right side interior surface, excluding hardware or armrests
(102) Right side hardware or armrest
(103) Right A (A1/A2)-pillar
(104) Right B-pillar
(105) Other right pillar (specify): _____
(106) Right side window glass
(107) Right side window frame
(108) Right side window sill
(109) Right side window glass including one or more of the following: frame, window sill, A (A1/A2)-pillar, B-pillar, or roof side rail.
(110) Other right side object (specify): _____

INTERIOR
(151) Seat, back support
(152) Belt restraint webbing/buckle
(153) Belt restraint B-pillar or door frame attachment point
(154) Other restraint system component (specify): _____
(155) Head restraint system
(160) Other occupants (specify): _____
(161) Interior loose objects
(162) Child safety seat (specify): _____
(163) Other interior object (specify): _____

AIR BAG
(170) Air bag-driver side
(175) Air bag compartment cover-driver side
(180) Air bag-passenger side
(185) Air bag compartment cover-passenger side
(190) Other air bag (specify) _____
(195) Other air bag compartment cover (specify) _____

ROOF
(201) Front header
(202) Rear header
(203) Roof left side rail
(204) Roof right side rail
(205) Roof or convertible top

FLOOR
(251) Floor (including toe pan)
(252) Floor or console mounted transmission lever, including console
(253) Parking brake handle
(254) Foot controls including parking brake

REAR
(301) Backlight (rear window)
(302) Backlight storage rack, door, etc.
(303) Other rear object (specify): _____

ADAPTIVE (ASSISTIVE) DRIVING EQUIPMENT
(401) Hand controls for braking/acceleration
(402) Steering control devices (attached to OEM steering wheel)
(403) Steering knob attached to steering wheel
(405) Replacement steering wheel (i.e., reduced diameter)
(406) Joy stick steering controls
(407) Wheelchair tie-downs
(408) Modification to seat belts, (specify): _____
(409) Additional or relocated switches, (specify): _____
(410) Raised roof
(411) Wall mounted head rest (used behind wheel chair)
(412) Other adaptive device (specify): _____

CONFIDENCE LEVEL OF CONTACT POINT
(1) Certain
(2) Probable
(3) Possible
(9) Unknown

MANUAL RESTRAINTS

NOTES: Encode the applicable data **for each seat position** in the vehicle. The attribute for the variable may be found below. Restraint systems should be assessed during the vehicle inspection then coded on the Occupant Assessment Form.

If a Child safety seat is present, encode the data on the back of this page.

If the vehicle has automatic restraints available, encode the appropriate data on the back of the previous page.

		Left	Center	Right
FIRST	Availability	4		4
	Evidence of usage	04		04
	Used in this crash?	00		00
	Proper Use	0		0
	Failure Modes	0		0
	Anchorage Adjustment	1		1
SECOND	Availability	3	3	3
	Evidence of usage	00	00	00
	Used in this crash?	00	00	00
	Proper Use	0	0	0
	Failure Modes	0	0	0
	Anchorage Adjustment	0	0	0
OTHER	Availability			
	Evidence of usage			
	Used in this crash?			
	Proper Use			
	Failure Modes			
	Anchorage Adjustment			

Manual (Active) Belt System Availability

(0) None available
(1) Belt removed/destroyed
(2) Shoulder belt
(3) Lap belt
(4) Lap and shoulder belt
(5) Belt available - type unknown

Integral Belt Partially Destroyed

(6) Shoulder belt (lap belt destroyed/removed)
(7) Lap belt (shoulder belt destroyed/removed)
(8) Other belt (specify): _____
(9) Unknown

Manual (Active) Belt System Use

(00) None used, not available, or belt removed/destroyed
(01) Inoperable (specify): _____
(02) Shoulder belt
(03) Lap belt
(04) Lap and shoulder belt
(05) Belt used - type unknown
(08) Other belt used (specify): _____
(12) Shoulder belt used with child safety seat
(13) Lap belt used with child safety seat
(14) Lap and shoulder belt used with child safety seat
(15) Belt used with child safety seat - type unknown
(18) Other belt used with child safety seat (specify): _____
(99) Unknown if belt used

Proper Use of Manual (Active) Belts

(0) None used or not available
(1) Belt used properly
(2) Belt used properly with child safety seat

Belt Used Improperly

(3) Shoulder belt worn under arm
(4) Shoulder belt worn behind back or seat
(5) Belt worn around more than one person
(6) Lap belt worn on abdomen
(7) Lap belt or lap and shoulder belt used improperly with child safety seat (specify): _____
(8) Other improper use of manual belt system (specify): _____
(9) Unknown

Manual (Active) Belt Failure Modes During Accident

(0) No manual belt used or not available
(1) No manual belt failure(s)
(2) Torn webbing (stretched webbing not included)
(3) Broken buckle or latchplate
(4) Upper anchorage separated
(5) Other anchorage separated (specify): _____
(6) Broken retractor
(7) Combination of above (specify): _____
(8) Other manual belt failure (specify): _____
(9) Unknown

Shoulder Belt Upper Anchorage Adjustment

(0) No shoulder belt
(1) No upper anchorage adjustment for shoulder belt

Adjustable shoulder Belt Upper Anchorage

(2) In full up position
(3) In mid position
(4) In full down position
(5) Position unknown
(9) Unknown if position has adjustable upper anchorage adjustment

AUTOMATIC RESTRAINTS

NOTES: Encode the data for each applicable front seat position. The attribute for the variables may be found below. Restraint systems should be assessed during the vehicle inspection then coded on the Occupant Assessment Form.

AIR BAGS

		Left Front	Right Front	Other
FIRST	Availability/Function			
	Deployment			
	Failure			

Air Bag System Availability/Function
(0) Not equipped/not available
(1) Air bag

Non-functional
(2) Air bag disconnected (specify):
_____
(3) Air bag not reinstalled
(9) Unknown

Are There Indications of Air Bag System Failure? (This Occupant Position)
(0) Not equipped/not available
(1) No
(2) Yes (specify):
_____
(9) Unknown

Frontal Air Bag System Deployment (This Occupant Position)
(0) Not equipped/not available
(1) Deployed during accident (as a result of impact)
(2) Deployed inadvertently just prior to accident
(3) Deployed, accident sequence undetermined
(4) Deployed as a result of a noncollision event during accident sequence (e.g., fire, explosion, electrical)
(5) Unknown if deployed
(7) Nondeployed
(9) Unknown

Air Bag(s) Deployment, *Other* Than First Seat Frontal (This Occupant Position)
(0) Not equipped with an *"other"* air bag
(1) Deployed during accident (as a result of impact)
(2) Deployed inadvertently just prior to accident
(3) Deployed, details unknown
(4) Deployed as a result of a noncollision event during accident sequence (e.g., fire, explosion, electrical)
(5) Unknown if deployed
(7) Nondeployed
(9) Unknown

AUTOMATIC BELTS

		Left	Right
FIRST	Availability/Function		
	Use		
	Type		
	Proper Use		
	Failure Modes		

Automatic (Passive) Belt System Availability/Function
(0) Not equipped/not available
(1) 2 point automatic belts
(2) 3 point automatic belts
(3) Automatic belts - type unknown

Non-functional
(4) Automatic belts destroyed or rendered inoperative
(9) Unknown

Automatic (Passive) Belt System Use
(0) Not equipped/not available/destroyed or rendered inoperative
(1) Automatic belt in use
(2) Automatic belt not in use (manually disconnected, motorized track inoperative)
(3) Automatic belt use unknown
(9) Unknown

Automatic (Passive) Belt System Type
(0) Not equipped/not available
(1) Non-motorized system
(2) Motorized system
(9) Unknown

Proper Use of Automatic (Passive) Belt System
(0) Not equipped/not available/not used
(1) Automatic belt used properly
(2) Automatic belt used properly with child safety seat

Automatic Belt Used Improperly
(3) Automatic shoulder belt worn under arm
(4) Automatic shoulder belt worn behind back
(5) Automatic belt worn around more than one person
(6) Lap portion of automatic belt worn on abdomen
(7) Automatic lap and shoulder belt or automatic shoulder belt used improperly with child safety seat (specify):
_____
(8) Other improper use of automatic belt system (specify):_____
(9) Unknown

Automatic (Passive) Belt Failure Modes During Accident
(0) Not equipped/not available/not in use
(1) No automatic belt failure(s)
(2) Torn webbing (stretched webbing not included)
(3) Broken buckle or latchplate
(4) Upper anchorage separated
(5) Other anchorage separated (specify):
_____
(6) Broken retractor
(7) Combination of above (specify):
(8) Other automatic belt failure (specify):
_____
(9) Unknown

FIRST SEAT FRONTAL AIR BAGS

NOTES: Encode the applicable data ***for the driver and first seat passenger*** in the vehicle. The attribute for the variable may be found below. Restraint systems should be assessed during the vehicle inspection then coded on the Occupant Assessment Form.

	Driver	Passenger
Type of air bag?		
Flaps open at tear points?		
Flaps damaged?		
Air bag damaged?		
Source of air bag damage		
Air bag tethered?		
Air bag have vent ports?		
Other occupant contact air bag?		
Occupant wearing eyewear?		

Type of Air Bag
- (0) Not equipped/not available
- (1) Original manufacturer installed system
- (2) Retrofitted air bag
- (3) Replacement air bag
- (8) Unknown type of air bag
- (9) Unknown

Did Air Bag Module Cover Flap(s) Open At Designated Tear Points?
- (0) Not equipped/not available
- (1) No
- (2) Yes
- (3) Deployed, unknown if flap(s) opened at designated tear points
- (7) Not deployed
- (8) Unknown if deployed
- (9) Unknown

Were Air Bag Module Cover Flap(s) Damaged?
- (0) Not equipped/not available
- (1) No
- (2) Yes (specify): _____
- (3) Deployed, unknown if air bag module cover flap(s) damaged
- (7) Not deployed
- (8) Unknown if deployed
- (9) Unknown

Was There Damage To The Air Bag?
- (00) Not equipped/not available
- (01) Not damaged

Yes - Air Bag Damage
- (02) Ruptured
- (03) Cut
- (04) Torn
- (05) Holed
- (06) Burned
- (07) Abraded
- (88) Other damage (specify): _____
- (95) Damaged, details unknown
- (96) Deployed, unknown if damaged
- (97) Not deployed
- (98) Unknown if deployed
- (99) Unknown

Source of Air Bag Damage
- (00) Not equipped/not available
- (01) Not damaged
- (02) Object worn by occupant, (specify): _____
- (03) Object carried by occupant, (specify): _____
- (04) Adaptive/assistive controls, (specify): _____
- (05) Fire in vehicle
- (06) Thermal burns
- (07) Rescue or emergency efforts
- (88) Other damage source (specify): _____
- (95) Damaged, unknown source
- (96) Deployed, unknown if damaged
- (97) Not deployed
- (98) Unknown if deployed
- (99) Unknown

Was The Air Bag Tethered?
- (0) Not equipped/not available
- (1) No
- (2) Yes (specify number of tether straps): _____
- (3) Deployed, unknown if tethered
- (7) Not deployed
- (8) Unknown if deployed
- (9) Unknown

Did The Air Bag Have Vent Ports?
- (0) Not equipped/not available
- (1) No
- (2) Yes (specify number of vent ports): _____
- (3) Deployed, unknown if vent ports present
- (7) Not deployed
- (8) Unknown if deployed
- (9) Unknown

Was the Air Bag in this Occupant's Position Contacted by Another Occupant?
- (0) Not equipped/not available
- (1) No
- (2) Yes (specify): _____
- (3) Deployed, unknown if other occupant contact to air bag
- (7) Not deployed
- (8) Unknown if deployed
- (9) Unknown

Was This Occupant Wearing Eye-wear?
- (0) Not equipped/not available
- (1) No
- (2) Eyeglasses/sunglasses
- (3) Contact lenses
- (4) Deployed, unknown if eyewear worn
- (7) Not deployed
- (8) Unknown if deployed
- (9) Unknown

DRIVER AIR BAG DAMAGE AND CONTACT SKETCHES

1. SKETCH DAMAGE AND CONTACT EVIDENCE ON DRIVER AIR BAG (Front)

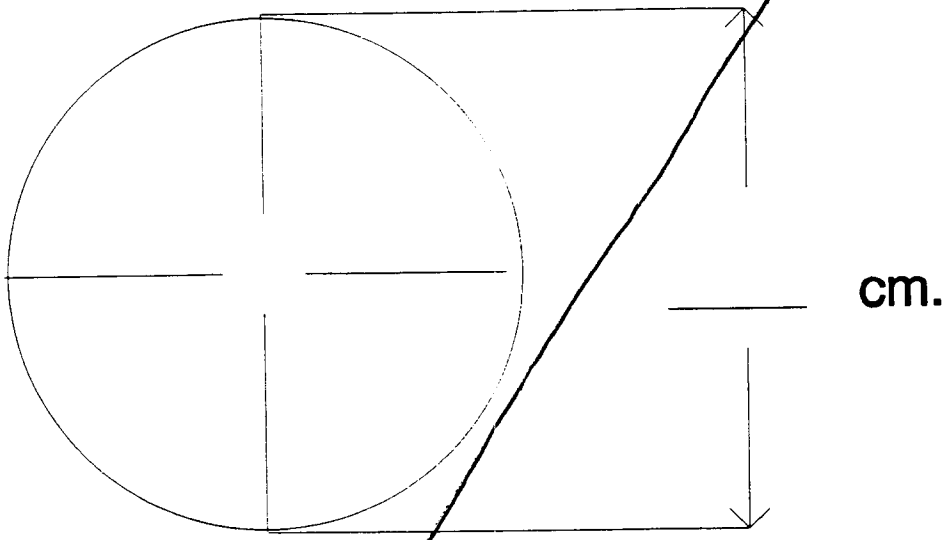

2. SKETCH DAMAGE AND CONTACT EVIDENCE ON DRIVER AIR BAG (Back)

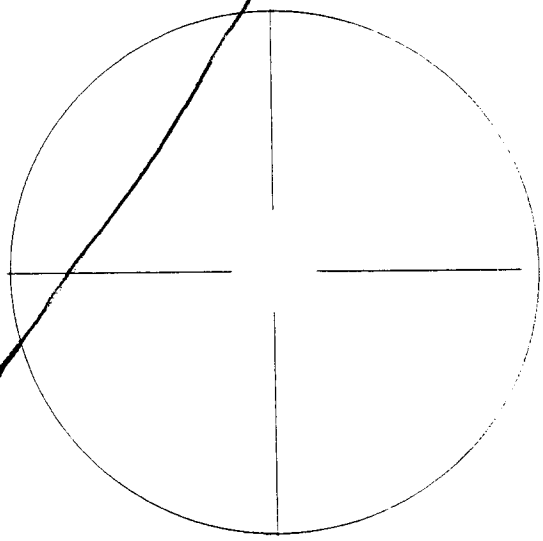

DRIVER AIR BAG SKETCHES (Cont'd)

3. DRIVER AIR BAG MODULE COVER FLAP SIZE (DOUBLE)

a. Upper Flap

width (W_U) _____

height (H_U) _____

b. Lower Flap

width (W_L) _____

height (H_L) _____

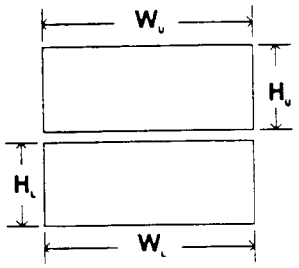

4. SKETCH OF OTHER TYPE OF AIR BAG MODULE FLAP AND SIZE

5. SKETCH OF OTHER TYPE OF AIR BAG VENT PORTS

6. SKETCH LOCATION OF CIRCULAR AIR BAG VENT PORTS

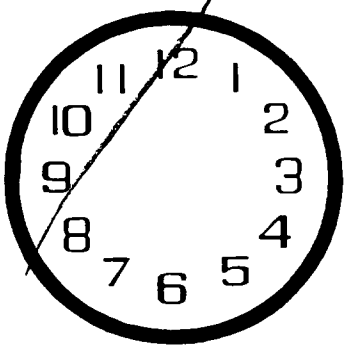

PASSENGER AIR BAG DAMAGE AND CONTACT SKETCHES

1. SKETCH DAMAGE AND CONTACT EVIDENCE ON PASSENGER AIR BAG (Front)

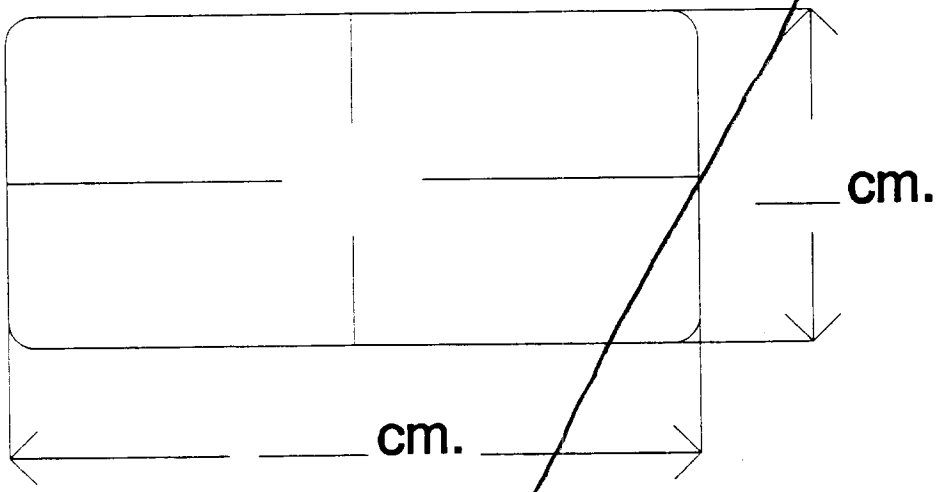

2. SKETCH DAMAGE AND CONTACT EVIDENCE ON PASSENGER AIR BAG (Back)

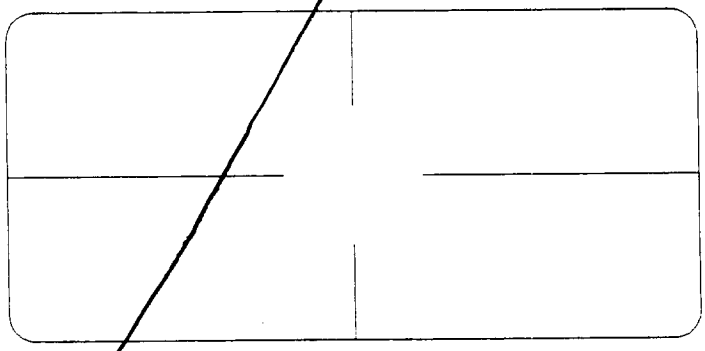

PASSENGER AIR BAG SKETCHES (Cont'd)

3. PASSENGER AIR BAG MODULE COVER FLAP SIZE (SINGLE)
   a. Flap

   width (W) _____

   height (H) _____

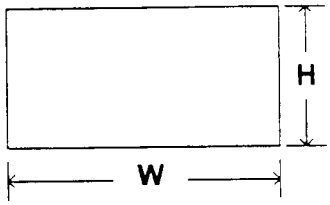

4. PASSENGER AIR BAG MODULE COVER FLAP SIZE (DOUBLE)

   a. Upper Flap

   width (W_U) _____

   height (H_U) _____

   b. Lower Flap

   width (W_L) _____

   height (H_L) _____

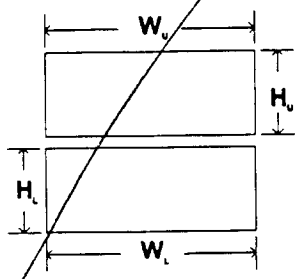

5. SKETCH OF OTHER TYPE OF AIR BAG MODULE FLAP AND SIZE

6. SKETCH OF OTHER TYPE OF AIR BAG VENT PORTS

7. SKETCH LOCATION OF RECTANGULAR AIR BAG VENT PORTS

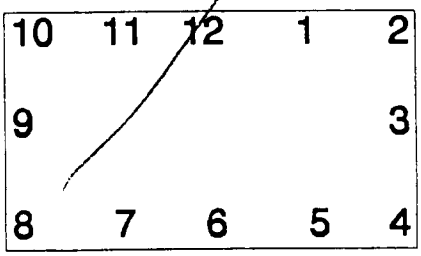

"OTHER" AIR BAG DAMAGE AND CONTACT SKETCHES

1. SKETCH DAMAGE AND CONTACT EVIDENCE ON *"OTHER"* AIR BAG (Front)

2. SKETCH DAMAGE AND CONTACT EVIDENCE ON *"OTHER"* AIR BAG (Back)

"OTHER" AIR BAG SKETCHES (Cont'd)

3. SKETCH AIR BAG MODULE FLAP AND SIZE OR OPENING FOR AIRBAG

4. SKETCH AIR BAG VENT PORTS

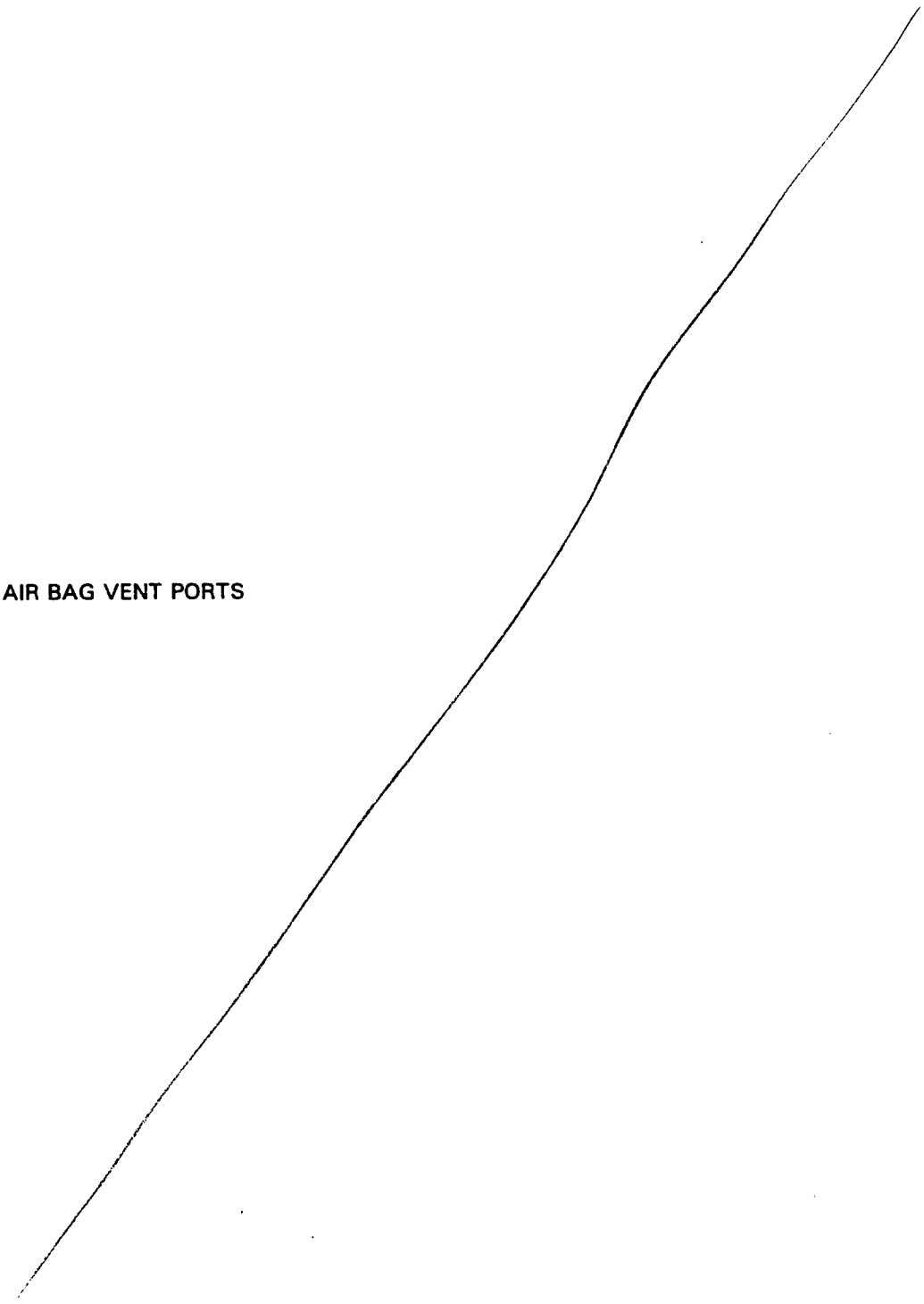

HEAD RESTRAINTS/SEAT EVALUATION

NOTES: Encode the applicable data for each seat position in the vehicle. The attribute for these variables may be found at the bottom of the page. Head restraint type/damage and seat type/performance should be assessed during the vehicle inspection then coded on the Occupant Assessment Form.

		Left	Center	Right
FIRST	Head Restraint Type/Damage	3		3
	Seat Type	02		02
	Seat Performance	3		0
	Seat Orientation	1		0
	Seat Track Position	6		0
	Seat Back Incline Pre/Post Impact	22		00
SECOND	Head Restraint Type/Damage	1	0	1
	Seat Type	07	07	07
	Seat Performance	0	0	0
	Seat Orientation	0	0	0
	Seat Track Position	0	0	0
	Seat Back Incline Pre/Post Impact	00	00	00
THIRD	Head Restraint Type/Damage			
	Seat Type			
	Seat Performance			
	Seat Orientation			
	Seat Track Position			
	Seat Back Incline Pre/Post Impact			
OTHER	Head Restraint Type/Damage			
	Seat Type			
	Seat Performance			
	Seat Orientation			
	Seat Track Position			
	Seat Back Incline Pre/Post Impact			

DESCRIBE ANY INDICATION OF ABNORMAL OCCUPANT POSTURE

(I.E., UNUSUAL OCCUPANT CONTACT PATTERN)

HEAD RESTRAINTS/SEAT EVALUATION

Head Restraint Type/Damage by Occupant at This Occupant Position
(0) No head restraints
(1) Integral — no damage
(2) Integral — damaged during accident
(3) Adjustable — no damage
(4) Adjustable — damaged during accident
(5) Add-on — no damage
(6) Add-on — damaged during accident
(8) Other
Specify):_____
(9) Unknown

Seat Type (this Occupant Position)
(00) Occupant not seated or no seat
(01) Bucket
(02) Bucket with folding back
(03) Bench
(04) Bench with separate back cushions
(05) Bench with folding back(s)
(06) Split bench with separate back cushions
(07) Split bench with folding back(s)
(08) Pedestal (i.e., column supported)
(09) Other seat type (specify):
_____
(10) Box mounted seat (i.e., van type)
(99) Unknown

Seat Performance (this Occupant Position)
(0) Occupant not seated or no seat
(1) No seat performance failure(s)
(2) Seat adjusters failed
(3) Seat back folding locks or "seat back" failed (specify):
_____
(4) Seat tracks/anchors failed
(5) Deformed by impact of occupant
(6) Deformed by passenger compartment intrusion (specify):_____
(7) Combination of above (specify):
_____
(8) Other (specify):
_____
(9) Unknown

Seat Orientation (this Occupant Position)
(0) Occupant not seated or no seat
(1) Forward facing seat
(2) Rear facing seat
(3) Side facing seat (inward)
(4) Side facing seat (outward)
(8) Other (specify):
_____
(9) Unknown

Seat Track Adjusted Position Prior To Impact
(0) Occupant not seated or no seat
(1) Non-adjustable seat track

Adjustable Seat Track
(2) Seat at forward most track position
(3) Seat between forward most and middle track positions
(4) Seat at middle track position
(5) Seat between middle and rear most track positions
(6) Seat at rear most track position
(9) Unknown

Seat Back Incline Prior and Post Impact
(00) Occupant not seated or no seat
(01) Not adjustable

Upright prior to impact
(11) Moved to completely rearward position
(12) Moved to rearward midrange position
(13) Moved to slightly rearward position
(14) Retained pre-impact position
(15) Moved to slightly forward position
(16) Moved to forward midrange position
(17) Moved to completely forward position

Slightly reclined prior to impact
(21) Moved to completely rearward position
(22) Moved to rearward midrange position
(23) Retained pre-impact postion
(24) Moved to upright position
(25) Moved to slightly forward position
(26) Moved to forward midrange position
(27) Moved to completely forward position

Completely reclined prior to impact
(31) Retained pre-impact position
(32) Moved to rearward midrange position
(33) Moved to slightly rearward position
(34) Moved to upright position
(35) Moved to slightly forward position
(36) Moved to forward midrange position
(37) Moved to completely forward position

(99) Unknown

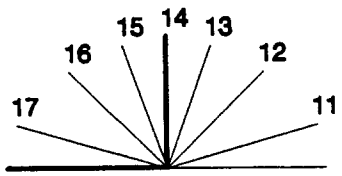

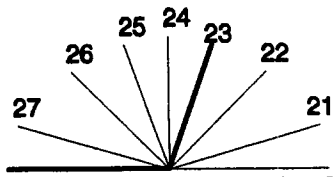

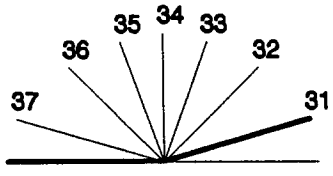

Coding diagrams for *Seat Back Incline Position Prior and Post Impact*

DESCRIBE ANY INDICATION OF ABNORMAL OCCUPANT POSTURE (I.E., UNUSUAL OCCUPANT CONTACT PATTERN)

CHILD SAFETY SEAT FIELD ASSESSMENT

When a child safety seat is present enter the occupant's number in the first row and complete the column below the occupant's number using the codes listed below. Complete a column for each child safety seat present.

Occupant Number						
1. Type of Child Safety Seat						
2. Child Safety Seat Orientation						
3. Child Safety Seat Harness Usage						
4. Child Safety Seat Shield Usage						
5. Child Safety Seat Tether Usage						
6. Child Safety Seat Make/Model	Specify Below for Each Child Safety Seat					

1. Type of Child Safety Seat

   (0) No child safety seat
   (1) Infant seat
   (2) Toddler seat
   (3) Convertible seat
   (4) Booster seat
   (7) Other type child safety seat (specify):

   _____

   (8) Unknown child safety seat type
   (9) Unknown if child safety seat used

2. Child Safety Seat Orientation

   (00) No child safety seat

   Designed for Rear Facing for This Age/Weight
   (01) Rear facing
   (02) Forward facing
   (08) Other orientation (specify):

   _____

   (09) Unknown orientation

   Designed for Forward Facing for This Age/Weight
   (11) Rear facing
   (12) Forward facing
   (18) Other orientation (specify):

   _____

   (19) Unknown orientation

   Unknown Design or Orientation For This Age/Weight, or Unknown Age/Weight
   (21) Rear facing
   (22) Forward facing
   (28) Other orientation (specify):

   _____

   (29) Unknown orientation

   (99) Unknown if child safety seat used

3. Child Safety Seat Harness Usage

4. Child Safety Seat Shield Usage

5. Child Safety Seat Tether Usage
   Note: Options Below Are Used for Variables 3-5.

   (00) No child safety seat

   Not Designed with Harness/Shield/Tether
   (01) After market harness/shield/tether added, not used
   (02) After market harness/shield/tether used
   (03) Child safety seat used, but no after market harness/shield/tether added
   (09) Unknown if harness/shield/tether added or used

   Designed With Harness/Shield/Tether
   (11) Harness/shield/tether not used
   (12) Harness/shield/tether used
   (19) Unknown if harness/shield/tether used

   Unknown If Designed With Harness/Shield/Tether
   (21) Harness/shield/tether not used
   (22) Harness/shield/tether used
   (29) Unknown if harness/shield/tether used

   (99) Unknown if child safety seat used

6. Child Safety Seat Make/Model
   (Specify make/model and occupant number)

   _____

   _____

   _____

   _____

EJECTION/ENTRAPMENT DATA

Complete the following if the researcher has any indication that an occupant was either ejected from or entrapped in the vehicle. Code the appropriate data on the Occupant Assessment Form.

EJECTION No [X] Yes [ ]

Describe indications of ejection and body parts involved in partial ejection(s):

Occupant Number						
Ejection						
(Note on Vehicle Interior Sketch) Ejection Area						
Ejection Medium						
Medium Status						

Ejection
(1) Complete ejection
(2) Partial ejection
(3) Ejection, Unknown degree
(9) Unknown

Ejection Area
(1) Windshield
(2) Left front
(3) Right front
(4) Left rear
(5) Right rear
(6) Rear
(7) Roof
(8) Other area (e.g., back of pickup, etc.) (specify): _____
(9) Unknown

Ejection Medium
(1) Door/hatch/tailgate
(2) Nonfixed roof structure
(3) Fixed glazing
(4) Nonfixed glazing (specify): _____
(5) Integral structure
(8) Other medium (specify): _____
(9) Unknown

Medium Status (Immediately Prior to Impact)
(1) Open
(2) Closed
(3) Integral structure
(9) Unknown

ENTRAPMENT No [X] Yes [ ]

Describe entrapment mechanism: _____

Component(s): _____

(Note in vehicle interior diagram)

U.S. Department of Transportation
National Highway Traffic Safety Administration

OCCUPANT ASSESSMENT FORM

Form Approved
O.M.B. No. 2127-0021

NATIONAL ACCIDENT SAMPLING SYSTEM
CRASHWORTHINESS DATA SYSTEM

1. Primary Sampling Unit Number: 09
2. Case Number - Stratum: 167A
3. Vehicle Number: 02
4. Occupant Number: 01

OCCUPANT'S CHARACTERISTICS

5. Occupant's Age: 40
Code actual age at time of accident.
(00) Less than one year old (specify by month): _____
(97) 97 years and older
(99) Unknown

Per PAR

6. Occupant's Sex: 1
(1) Male
(2) Female-not reported pregnant
(3) Female-pregnant-1st trimester(1st-3rd month)
(4) Female-pregnant-2nd trimester(4th-6th month)
(5) Female-pregnant-3rd trimester(7th-9th month)
(6) Female-pregnant-term unknown
(9) Unknown

7. Occupant's Height: 999
Code actual height to the nearest centimeter.
(999) Unknown

__ __ inches X 2.54 = __ __ __ centimeters

8. Occupant's Weight: 999
Code actual weight to the nearest kilogram.
(999)Unknown

__ __ __ pounds X .4536 = __ __ __ kilograms

9. Occupant's Role: 1
(1) Driver
(2) Passenger
(9) Unknown

OCCUPANT'S SEATING

10. Occupant's Seat Position: 11

Front Seat
(11) Left side
(12) Middle
(13) Right side
(14) Other (specify): _____
(15) On or in the lap of another occupant

Second Seat
(21) Left side
(22) Middle
(23) Right side
(24) Other (specify): _____
(25) On or in the lap of another occupant

Third Seat
(31) Left side
(32) Middle
(33) Right side
(34) Other (specify): _____
(35) On or in the lap of another occupant

Fourth Seat
(41) Left side
(42) Middle
(43) Right side
(44) Other (specify): _____
(45) On or in the lap of another occupant

(97) In or on unenclosed area
(98) Other seat (specify): _____
(99) Unknown

11. Occupant's Posture: 9
(0) Normal posture

Abnormal posture
(1) Kneeling or standing on seat
(2) Lying on or across seat
(3) Kneeling, standing or sitting in front of seat
(4) Sitting sideways or turned to talk with another occupant or to look out a rear window
(5) Sitting on a console
(6) Lying back in a reclined seat position
(7) Bracing with feet or hands on a surface in front of seat
(8) Other abnormal posture (specify): _____
(9) Unknown

This report is authorized by P.L. 89-563, Title 1, Section 106, 108, and 112. While you are not required to respond, your cooperation is needed to make the results of this data collection effort comprehensive, accurate, and timely.

EJECTION/ENTRAPMENT

12. Ejection 0
    (0) No ejection
    (1) Complete ejection
    (2) Partial ejection
    (3) Ejection, unknown degree
    (9) Unknown

13. Ejection Area 0
    (0) No ejection
    (1) Windshield
    (2) Left front
    (3) Right front
    (4) Left rear
    (5) Right rear
    (6) Rear
    (7) Roof
    (8) Other area (e.g., back of pickup, etc.)
    (specify):_____
    (9) Unknown

14. Ejection Medium 0
    (0) No ejection
    (1) Door/hatch/tailgate
    (2) Nonfixed roof structure
    (3) Fixed glazing
    (4) Nonfixed glazing (specify):
    _____
    (5) Integral structure
    (8) Other medium (specify):
    _____
    (9) Unknown

15. Medium Status (Immediately Prior To Impact) 0
    (0) No ejection
    (1) Open
    (2) Closed
    (3) Integral structure
    (9) Unknown

16. Entrapment 0
    (0) Not entrapped/exit not inhibited
    (1) Entrapped/pinned - mechanically restrained
    (2) Could not exit vehicle due to jammed doors, fire, etc.
    (specify):_____
    _____
    (9) Unknown

17. Occupant Mobility 9
    (0) Occupant fatal before removed from vehicle
    (1) Removed from vehicle while unconscious or disoriented
    (2) Removed from vehicle due to injuries
    (3) Exited vehicle with some assistance
    (4) Exited vehicle under own power
    (5) Occupant fully ejected
    (9) Unknown

BELT SYSTEM FUNCTION

18. Manual (Active) Belt System Availability 4
(0) None available
(1) Belt removed/destroyed
(2) Shoulder belt
(3) Lap belt
(4) Lap and shoulder belt
(5) Belt available—type unknown

Integral Belt Partially Destroyed
(6) Shoulder belt (lap belt destroyed/removed)
(7) Lap belt (shoulder belt destroyed/removed)
(8) Other belt (specify): _____
(9) Unknown

19. Manual (Active) Belt System Use 00
(00) None used, not available, or belt removed/destroyed
(01) Inoperative (specify): _____
(02) Shoulder belt
(03) Lap belt
(04) Lap and shoulder belt
(05) Belt used—type unknown
(08) Other belt used (specify): _____
(12) Shoulder belt used with child safety seat
(13) Lap belt used with child safety seat
(14) Lap and shoulder belt used with child safety seat
(15) Belt used with child safety seat—type unknown
(18) Other belt used with child safety seat (specify): _____
(99) Unknown if belt used

20. Proper Use of Manual (Active) Belts 0
(0) None used or not available
(1) Belt used properly
(2) Belt used properly with child safety seat

Belt Used Improperly
(3) Shoulder belt worn under arm
(4) Shoulder belt worn behind back or seat
(5) Belt worn around more than one person
(6) Lap belt worn on abdomen
(7) Lap belt or lap and shoulder belt used improperly with child safety seat (specify): _____
(8) Other improper use of manual belt system (specify): _____
(9) Unknown

21. Manual (Active) Belt Failure Modes During Accident 0
(0) No manual belt used or not available
(1) No manual belt failure(s)
(2) Torn webbing (stretched webbing not included)
(3) Broken buckle or latchplate
(4) Upper anchorage separated
(5) Other anchorage separated (specify): _____
(6) Broken retractor
(7) Combination of above (specify): _____
(8) Other manual belt failure (specify): _____
(9) Unknown

22. Shoulder Belt Upper Anchorage Adjustment 1
(0) No shoulder belt
(1) No upper anchorage adjustment for shoulder belt

Adjustable shoulder Belt Upper Anchorage
(2) In full up position
(3) In mid position
(4) In full down position
(5) Position unknown
(9) Unknown if position has adjustable upper anchorage adjustment

23. Automatic (Passive) Belt System Availability/ Function 0
(0) Not equipped/not available
(1) 2 point automatic belts
(2) 3 point automatic belts
(3) Automatic belts - type unknown

Non-functional
(4) Automatic belts destroyed or rendered inoperative
(9) Unknown

24. Automatic (Passive) Belt System Use 0
(0) Not equipped/not available/destroyed or rendered inoperative
(1) Automatic belt in use
(2) Automatic belt not in use (manually disconnected, motorized track inoperative) (specify): _____
(3) Automatic belt use unknown
(9) Unknown

25. Automatic (Passive) Belt System Type 0
(0) Not equipped/not available
(1) Non-motorized system
(2) Motorized system
(9) Unknown

26. Proper Use of Automatic (Passive) Belt System 0
(0) Not equipped/not available/not used
(1) Automatic belt used properly
(2) Automatic belt used properly with child safety seat

Automatic Belt Used Improperly
(3) Automatic shoulder belt worn under arm
(4) Automatic shoulder belt worn behind back
(5) Automatic belt worn around more than one person
(6) Lap portion of automatic belt worn on abdomen
(7) Automatic lap and shoulder belt or automatic shoulder belt used improperly with child safety seat (specify): _____
(8) Other improper use of automatic belt system (specify): _____
(9) Unknown

27. Automatic (Passive) Belt Failure Modes During Accident 0
(0) Not equipped/not available/not in use
(1) No automatic belt failure(s)
(2) Torn webbing (stretched webbing not included)
(3) Broken buckle or latchplate
(4) Upper anchorage separated
(5) Other anchorage separated (specify): _____
(6) Broken retractor
(7) Combination of above (specify):
(8) Other automatic belt failure (specify): _____
(9) Unknown

POLICE REPORTED RESTRAINT USE

28. Police Reported Belt Use 4
(0) None used
(1) Police did not indicate belt use
(2) Shoulder belt
(3) Lap belt
(4) Lap and shoulder belt
(5) Belt used, type not specified
(6) Child safety seat
(7) Automatic belt
(8) Other type belt, (specify): _____
(9) Police indicated "unknown"

29. Police Reported Air Bag Availability/Function 0
(0) No air bag available
(1) Police did not indicate air bag availability/function
(2) Deployed
(3) Not deployed
(4) Unknown if deployed
(9) Police indicated "unknown"

Check the Primary Source Used In Determining Belt Use.

[ ] Not equipped/not available/destroyed or rendered inoperative
[✓] Vehicle inspection
[ ] Official injury data
[ ] Driver/occupant interview
[ ] Other (specify): _____
[ ] Unknown if belt used

AIR BAG SYSTEM FUNCTION

30. Frontal Air Bag System Availability/Function (This Occupant Position) 0
(0) Not equipped/not available
(1) Air bag

Non-functional
(2) Air bag disconnected (specify): _____
(3) Air bag not reinstalled
(9) Unknown

31. Frontal Air Bag System Deployment (This Occupant Position) 0
(0) Not equipped/not available
(1) Deployed during accident (as a result of impact)
(2) Deployed inadvertently just prior to accident
(3) Deployed, details unknown
(4) Deployed as a result of a noncollision event during accident sequence (e.g., fire, explosion, electrical)
(5) Unknown if deployed
(7) Nondeployed
(9) Unknown

32. Other Than First Seat Frontal Air Bag Availability/Function (This Occupant Position) 0
(0) Not equipped/not available
(1) Air bag

Non-functional
(2) Air bag disconnected (specify): _____
(3) Air bag not reinstalled
(9) Unknown
Specify type of "other" air bag present: _____

33. Air Bag(s) Deployment, Other Than First Seat Frontal (This Occupant Position) 0
(0) Not equipped with an "other" air bag
(1) Deployed during accident (as a result of impact)
(2) Deployed inadvertently just prior to accident
(3) Deployed, details unknown
(4) Deployed as a result of a noncollision event during accident sequence (e.g., fire, explosion, electrical)
(5) Unknown if deployed
(7) Nondeployed
(9) Unknown

34. Are There Indications of Air Bag System Failure? (This Occupant Position) 0
(0) Not equipped/not available
(1) No
(2) Yes (specify): _____
(9) Unknown

FIRST SEAT FRONTAL AIR BAG SYSTEM EVALUATION

35. Had Vehicle Been in Previous Accident(s)? 0
(0) Not equipped/not available
(1) No previous accidents

Yes
(2) Previous accident(s) without deployment(s)
(3) One previous accident with deployment
(4) More than one previous accident with at least one deployment
(8) Previous accidents, unknown deployment status
(9) Unknown

36. Type of Air Bag 0
(0) Not equipped/not available
(1) Original manufacturer installed system
(2) Retrofitted air bag
(3) Replacement air bag
(8) Unknown type of air bag
(9) Unknown

37. Had Any Prior Maintenance/Service Been Performed On This Air Bag System? 0
(0) Not equipped/not available
(1) No prior maintenance
(2) Yes, prior maintenance (specify): _____
(9) Unknown

38. Air Bag Deployment Accident Event Sequence Number 00
(00) Not equipped/not available
(__) Code the accident event sequence number that initiated the air bag deployment
(96) Deployed, unknown event
(97) Not deployed
(98) Unknown if deployed
(99) Unknown

39. CDC For Air Bag Deployment Impact 0
(0) Not equipped/not available
(1) Highest delta V
(2) Second highest delta V
(3) Other non-coded delta V (specify): _____
(6) Deployed, unknown event
(7) Not deployed
(8) Unknown if deployed
(9) Unknown

40. Longitudinal Component of Delta V For Air Bag Deployment Impact + − 000
(_000) Not equipped/not available
Code the value of the delta V for the impact that initiated the air bag deployment
(_996) Deployment, unknown longitudinal Delta V
(_997) Not deployed
(_998) Unknown if deployed
(_999) Unknown

41. Did Air Bag Module Cover Flap(s) Open At Designated Tear Points? 0
(0) Not equipped/not available
(1) No
(2) Yes
(3) Deployed, unknown if flap(s) opened at designated tear points
(7) Not deployed
(8) Unknown if deployed
(9) Unknown

42. Were Air Bag Module Cover Flap(s) Damaged? 0
(0) Not equipped/not available
(1) No
(2) Yes (specify): _____
(3) Deployed, unknown if air bag module cover flap(s) damaged
(7) Not deployed
(8) Unknown if deployed
(9) Unknown

43. Was There Damage To The Air Bag? 00
(00) Not equipped/not available
(01) Not damaged

Yes - Air Bag Damage
(02) Ruptured
(03) Cut
(04) Torn
(05) Holed
(06) Burned
(07) Abraded
(88) Other damage (specify): _____
(95) Damaged, details unknown
(96) Deployed, unknown if damaged
(97) Not deployed
(98) Unknown if deployed
(99) Unknown

FIRST SEAT FRONTAL AIR BAG SYSTEM EVALUATION *continued*

44. Source of Air Bag Damage 00
(00) Not equipped/not available
(01) Not damaged
(02) Object worn by occupant, (specify):
(03) Object carried by occupant, (specify):
(04) Adaptive/assistive controls, (specify):
(05) Fire in vehicle
(06) Thermal burns
(07) Rescue or emergency efforts
(88) Other damage source (specify):
(95) Damaged, unknown source
(96) Deployed, unknown if damaged
(97) Not deployed
(98) Unknown if deployed
(99) Unknown

45. Was The Air Bag Tethered? 0
(0) Not equipped/not available
(1) No
(2) Yes (specify number of tether straps):
(3) Deployed, unknown if tethered
(7) Not deployed
(8) Unknown if deployed
(9) Unknown

46. Did The Air Bag Have Vent Ports? 0
(0) Not equipped/not available
(1) No
(2) Yes (specify number of vent ports):
(3) Deployed, unknown if vent ports present
(7) Not deployed
(8) Unknown if deployed
(9) Unknown

47. Was the Air Bag in this Occupant's Position Contacted by Another Occupant? 0
(0) Not equipped/not available
(1) No
(2) Yes (specify):
(3) Deployed, unknown if other occupant contact to air bag
(7) Not deployed
(8) Unknown if deployed
(9) Unknown

48. Was This Occupant Wearing Eye-wear? 0
(0) Not equipped/not available
(1) No
(2) Eyeglasses/sunglasses
(3) Contact lenses
(4) Deployed, unknown if eyewear worn
(7) Not deployed
(8) Unknown if deployed
(9) Unknown

HEAD RESTRAINT AND SEAT EVALUATION

49. Head Restraint Type/Damage by Occupant at This Occupant Position 3
(0) No head restraints
(1) Integral—no damage
(2) Integral—damaged during accident
(3) Adjustable—no damage
(4) Adjustable—damaged during accident
(5) Add-on—no damage
(6) Add-on—damaged during accident
(8) Other (specify):
(9) Unknown

50. Seat Type (this Occupant Position) 02
(00) Occupant not seated or no seat
(01) Bucket
(02) Bucket with folding back
(03) Bench
(04) Bench with separate back cushions
(05) Bench with folding back(s)
(06) Split bench with separate back cushions
(07) Split bench with folding back(s)
(08) Pedestal (i.e., column supported)
(09) Box mounted seat (i.e., van type)
(10) Other seat type (specify):
(99) Unknown

51. Seat Orientation (this Occupant Position) 1
(0) Occupant not seated or no seat
(1) Forward facing seat
(2) Rear facing seat
(3) Side facing seat (inward)
(4) Side facing seat (outward)
(8) Other (specify):
(9) Unknown

52. Seat Track Adjusted Position Prior To Impact 6
(0) Occupant not seated or no seat
(1) Non-adjustable seat track

Adjustable Seat Track
(2) Seat at forward most track position
(3) Seat between forward most and middle track positions
(4) Seat at middle track position
(5) Seat between middle and rear most track positions
(6) Seat at rear most track position
(9) Unknown

HEAD RESTRAINT AND SEAT EVALUATION *continued*

53. Seat Back Incline Prior and Post Impact 22
(00) Occupant not seated or no seat
(01) Not adjustable

Upright prior to impact
(11) Moved to completely rearward position
(12) Moved to rearward midrange position
(13) Moved to slightly rearward position
(14) Retained pre-impact position
(15) Moved to slightly forward position
(16) Moved to forward midrange position
(17) Moved to completely forward position

Slightly reclined prior to impact
(21) Moved to completely rearward position
(22) Moved to rearward midrange position
(23) Retained pre-impact position
(24) Moved to upright position
(25) Moved to slightly forward position
(26) Moved to forward midrange position
(27) Moved to completely forward position

Completely reclined prior to impact
(31) Retained pre-impact position
(32) Moved to rearward midrange position
(33) Moved to slightly rearward position
(34) Moved to upright position
(35) Moved to slightly forward position
(36) Moved to forward midrange position
(37) Moved to completely forward position

(99) Unknown

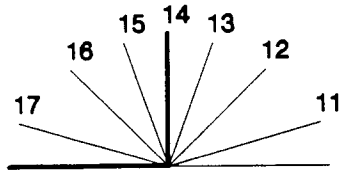

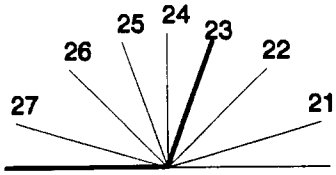

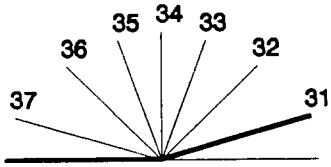

54. Seat Performance (this Occupant Position) 3
(0) Occupant not seated or no seat
(1) No seat performance failure(s)
(2) Seat adjusters failed
(3) Seat back folding locks or "seat back" failed
(specify):_____
(4) Seat track/anchors failed
(5) Deformed by impact of occupant
(6) Deformed by passenger compartment
intrusion, (specify):_____
_____
(7) Combination of above (specify):
_____
(8) Other (specify): _____
(9) Unknown

CHILD SAFETY SEAT

55. Child Safety Seat Make/Model 000
(000) No child safety seat
Applicable codes are found in your NASS CDS Data Collection, Coding and Editing
(950) Built-in child safety seat
(997) Other make/model (specify): _____
(998) Unknown make/model
(999) Unknown if child safety seat used

56. Type of Child Safety Seat 0
(0) No child safety seat
(1) Infant seat
(2) Toddler seat
(3) Convertible seat
(4) Booster seat - with shield
(5) Booster seat - without shield
(7) Other type child safety seat (specify): _____
(8) Unknown child safety seat type
(9) Unknown if child safety seat used

57. Child Safety Seat Orientation 00
(00) No child safety seat

Designed for Rear Facing for This Age/Weight
(01) Rear facing
(02) Forward facing
(08) Other orientation (specify): _____
(09) Unknown orientation

Designed For Forward Facing for This Age/Weight
(11) Rear facing
(12) Forward facing
(18) Other orientation (specify): _____
(19) Unknown orientation

Unknown Design or Orientation For This Age/Weight, or Unknown Age/Weight
(21) Rear facing
(22) Forward facing
(28) Other orientation (specify): _____
(29) Unknown orientation

(99) Unknown if child safety seat used

58. Child Safety Seat Harness Usage 00

59. Child Safety Seat Shield Usage 00

60. Child Safety Seat Tether Usage 00

Note: Options below applicable to Variables OA58-OA60.
(00) No child safety seat

Not Designed With Harness/Shield/Tether
(01) After market harness/shield/tether added, not used
(02) After market harness/shield/tether used
(03) Child safety seat used, but no after market harness/shield/tether added
(09) Unknown if harness/shield/tether added or used

Designed With Harness/Shield/Tether
(11) Harness/shield/tether not used
(12) Harness/shield/tether used
(19) Unknown if harness/shield/tether used

Unknown If Designed With Harness/Shield/Tether
(21) Harness/shield/tether not used
(22) Harness/shield/tether used
(29) Unknown if harness/shield/tether used

(99) Unknown if child safety seat used

INJURY CONSEQUENCES

61. Injury Severity (Police Rating) 0

(0) O - No injury
(1) C - Possible injury
(2) B - Nonincapacitating injury
(3) A - Incapacitating injury
(4) K - Killed
(5) U - Injury, severity unknown
(6) Died prior to accident
(9) Unknown

62. Treatment - Mortality 0
(0) No treatment
(1) Fatal
(2) Fatal - ruled disease (specify):

_____

Nonfatal
(3) Hospitalization
(4) Transported and released
(5) Treatment at scene - nontransported
(6) Treatment later
(7) Treatment - other (specify):

_____
(8) Transported to a medical facility-unknown if treated
(9) Unknown

63. Type Of Medical Facility (for Initial Treatment) 0
(0) Not treated at a medical facility
(1) Trauma center
(2) Hospital
(3) Medical clinic
(4) Physician's office
(5) Treatment later at medical facility
(8) Other (specify):

_____
(9) Unknown

64. Hospital Stay 00
(00) Not Hospitalized
____Code the number of days (up through 60) that the occupant stayed in hospital.
(61) 61 days or more
(99) Unknown

65. Working Days Lost 99
____Code the number of days (up through 60) that the occupant lost from work due to the accident
(00) No working days lost
(61) 61 days or more
(62) Fatally injured
(97) Not working prior to accident
(99) Unknown

STOP WORK HERE

VARIABLES 66-74

TO BE CODED BY THE ZONE CENTER

TO BE CODED BY THE ZONE CENTER

INJURY CONSEQUENCES

66. Time to Death 00
_____Code number of hours from time of accident to time of death up through 24 hours. If time of death is greater than 24 hours, code number of days. (Note: 1 day = 31, 2 days = 32, ... n days = 30 +n up through 30 days = 60)
(00) Not fatal
(96) Fatal - ruled disease
(99) Unknown

67. 1st Medically Reported Cause of Death 00

68. 2nd Medically Reported Cause of Death 00

69. 3rd Medically Reported Cause of Death 00
_____Code the Occupant Injury from line number(s) for the medically reported injury(s) which reportedly contributed to this occupant's death
(00) Not fatal or no additional causes
(96) Mode of death given but specific injuries are not linked to cause of death. (specify):
_____
(97) Other result (includes fatal ruled disease) (specify):
_____
(99) Unknown

70. Number of Recorded Injuries for This Occupant 00
_____Code the actual number of injuries recorded for this occupant.
(00) No recorded injuries
(97) Injured, details unknown
(99) Unknown if injured

TRAUMA DATA

71. Glasgow Coma Scale (GCS) Score (at Medical Facility) 00
(00) Not injured
(01) Injured - not treated at medical facility
(02) No GCS Score at medical facility
(03-15) Code the actual value of the initial GCS Score recorded at medical facility.
(97) Injured, details unknown
(99) Unknown if injured

72. Was the Occupant Given Blood? 1
(1) No - blood not given
(2) Yes - blood given
(specify units):_____
(9) Unknown if blood given

73. Arterial Blood Gases (ABG) – HCO_3 00
(00) Not injured
(01) Injured, ABGs not measured or reported
(02-50) Code the actual value of the HCO_3
(96) ABGs reported , HCO_3 unknown
(97) Injured, details unknown
(99) Unknown if injured

BELT USE DETERMINATION

74. Primary Source of Belt Use Determination 1
(0) Not equipped/not available/destroyed or rendered inoperative
(1) Vehicle inspection
(2) Official injury data
(3) Driver/occupant interview
(8) Other (specify):_____
(9) Unknown if belt used

PSU NUMBER 09

CASE NUMBER 167A

VEHICLE NUMBER 02

OCCUPANT NUMBER 01

OCCUPANT INJURY FORM

THE FOLLOWING DATA IS NOT INCLUDED IN THIS CASE:

[X] ENTIRE FORM

[] PAGE NUMBER (S) _____

BEST AVAILABLE COPY

U.S. Department of Transportation
National Highway Traffic Safety Administration

CRASHPC PROGRAM SUMMARY

(All Measurements In Metric)

NATIONAL ACCIDENT SAMPLING SYSTEM
CRASHWORTHINESS DATA SYSTEM

Identifying Title

09	167A	01	[redacted] 96
Primary Sampling Unit	Case No.-Stratum	Accident Event Sequence No.	Date (Month, day, year) of Run

CRASHPC Vehicle Identification

	Year	Make	Model	NASS Veh. No.
Vehicle 1	1993	Infinity	J30T	01
Vehicle 2	CDC	Barrier Test		

GENERAL INFORMATION

	VEHICLE 1	VEHICLE 2
Size	3	11
Weight	1600 (Curb) − 82 (Occupant(s)) + 0 (Cargo) = 1682 kg	____ (Curb) + ____ (Occupant(s)) + ____ (Cargo) = ____ kg
CDC	12FLEN3	
PDOF (-180 to +180)	±000°	±___°
Stiffness	3	11

SCENE INFORMATION

Rest and Impact Positions [ ] No, *Go To Damage Information* [ ] Yes

		VEHICLE 1	VEHICLE 2
Rest Position	X	____.__ m	____.__ m
	Y	____.__ m	____.__ m
	PSI	___°	___°
Impact Position	X	____.__ m	____.__ m
	Y	____.__ m	____.__ m
	PSI	___°	___°
Slip Angle(-180 to +180)		___°	___°

VEHICLE MOTION

Sustained Contact [ ] No [ ] Yes

		VEHICLE 1	VEHICLE 2
Vehicle Rotation		[ ] No [ ] Yes	[ ] No [ ] Yes
Rotation Stop Before Rest		[ ] No [ ] Yes	[ ] No [ ] Yes
End of Rotation Position	X	____.__ m	____.__ m
	Y	____.__ m	____.__ m
	PSI	___°	___°
Curved Path		[ ] No [ ] Yes	[ ] No [ ] Yes
Point on Path	X	____.__ m	____.__ m
	Y	____.__ m	____.__ m
Rotation Direction		[ ] None [ ] CW [ ] CCW	[ ] None [ ] CW [ ] CCW
Rotation >360°		[ ] No [ ] Yes	[ ] No [ ] Yes

BEST AVAILABLE COPY

FRICTION INFORMATION

Coefficient of Friction ___ ___ ___

Rolling Resistance Option ___

Vehicle 1 Rolling Resistance

LF ___ . ___ ___ RF ___ . ___ ___

LR ___ . ___ ___ RR ___ . ___ ___

Vehicle 2 Rolling Resistance

LF ___ . ___ ___ RF ___ . ___ ___

LR ___ . ___ ___ RR ___ . ___ ___

TRAJECTORY INFORMATION

Trajectory Data [ ] **No** [ ] **Yes**

If No, Go To Damage Information

Vehicle 1 Steer Angles

LF ___ ___ ___ ° RF ___ ___ ___ °

LR ___ ___ ___ ° RR ___ ___ ___ °

Vehicle 2 Steer Angles

LF ___ ___ ___ ° RF ___ ___ ___ °

LR ___ ___ ___ ° RR ___ ___ ___ °

Terrain Boundary [ ] **No** [ ] **Yes**

First Point

X ___ ___ ___ . ___ m Y ___ ___ ___ . ___ m

Second Point

X ___ ___ ___ . ___ m Y ___ ___ ___ . ___ m

Secondary Coefficient of Friction .___ ___ ___

DAMAGE INFORMATION

	VEHICLE 1		VEHICLE 2	
Damage Length	L	___ ___ ___ cm	L	___ ___ ___ cm
Crush Depths	C_1	___ ___ ___ cm	C_1	___ ___ ___ cm
	C_2	___ ___ ___ cm	C_2	___ ___ ___ cm
	C_3	___ ___ ___ cm	C_3	___ ___ ___ cm
	C_4	___ ___ ___ cm	C_4	___ ___ ___ cm
	C_5	___ ___ ___ cm	C_5	___ ___ ___ cm
	C_6	___ ___ ___ cm	C_6	___ ___ ___ cm
Damage Offset	D $\pm$	___ ___ ___ cm	D $\pm$	___ ___ ___ cm

IF THIS COMMON IMPACT WAS WITH A MOTOR VEHICLE *NOT IN TRANSPORT*, FILL IN THE INFORMATION BELOW.

Model Year: _____

Make: _____

Model: _____

VIN: _____

The Weight, CDC, Scene Data and Damage Information for this vehicle should be recorded above.

Complete and ATTACH the appropriate vehicle damage sketch and dimensions to the Form.

Printing Picture: CRASH

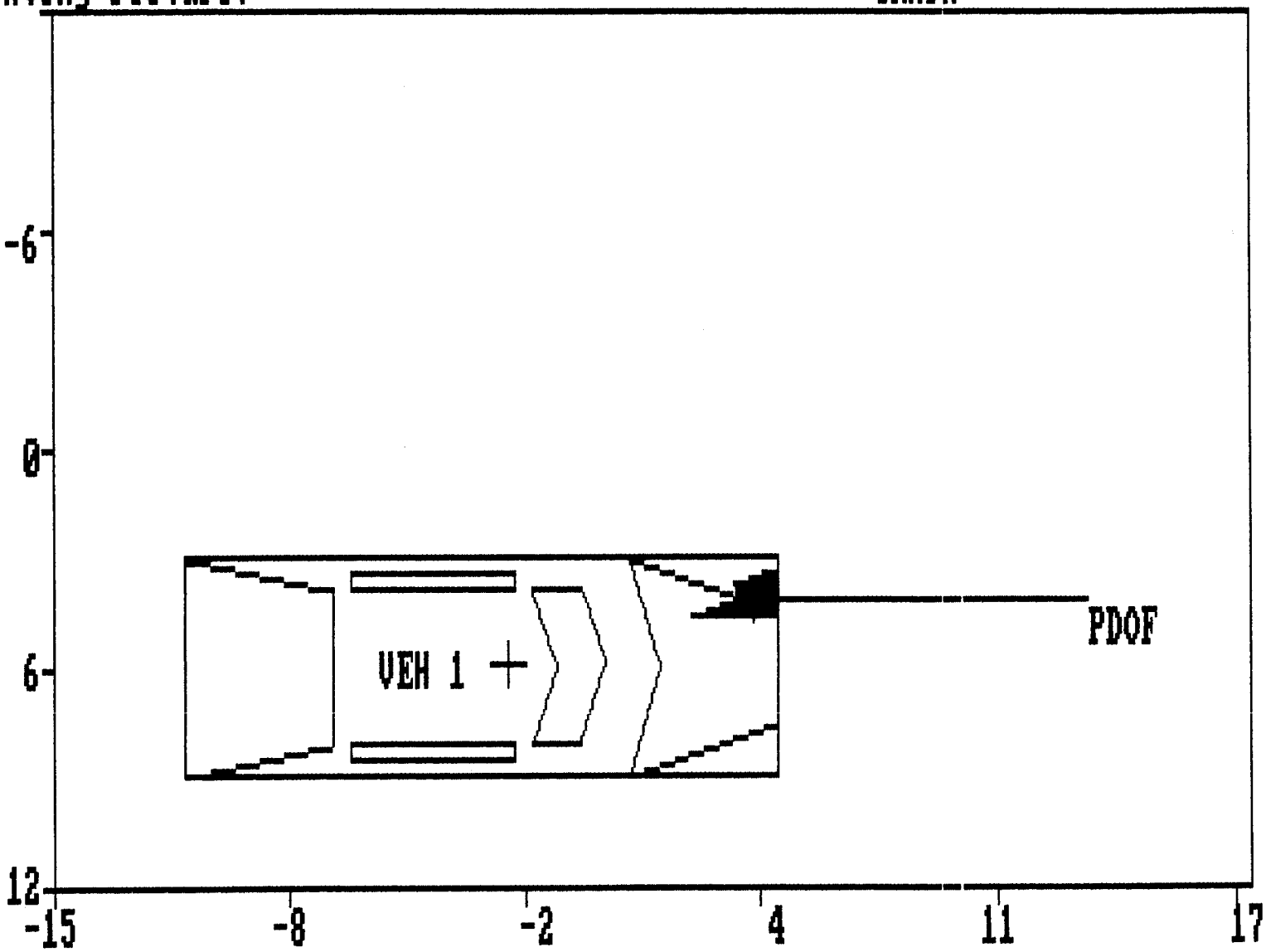

DAMAGE DESCRIPTION

INPUT CALCULATE TRAJECTORY OUTPUT GRAPHICS EXIT

SUMMARY OF CRASHPC RESULTS USING DAMAGE

167A Event 1 - V1 CDC Only

	SPEED CHANGE (DAMAGE)
VEHICLE #1	
TOTAL	17 KPH (11 MPH)
LONGITUDINAL	-17 KPH (-11 MPH)
LATITUDINAL	0 KPH (0 MPH)
PDOF ANGLE	0 DEGREES
ENERGY DISSIPATED =	21841 JOULES (16107 FT-LB)
VEHICLE #2	
TOTAL	0 KPH (0 MPH)
LONGITUDINAL	0 KPH (0 MPH)
LATITUDINAL	0 KPH (0 MPH)
PDOF ANGLE	0 DEGREES
ENERGY DISSIPATED =	0 JOULES (0 FT-LB)

PRESS ANY KEY TO CONTINUE

INPUT CALCULATE TRAJECTORY OUTPUT GRAPHICS EXIT

DAMAGE DATA

	VEHICLE #1	VEHICLE #2
SIZE CATEGORY	3	11
STIFFNESS CATEGORY	3	0
VEHICLE WEIGHT	1682 KGS (3708 LBS)	****** KGS (2204586 LBS) *
CDC	12FLEN3	BARRIER
PDOF ANGLE	0 DEGREES	0 DEGREES *
CRUSH LENGTH	0 CM. (0 IN.) *	0 CM. (0 IN.) *
C1	0 CM. (0 IN.) *	0 CM. (0 IN.) *
C2	0 CM. (0 IN.) *	0 CM. (0 IN.) *
C3	0 CM. (0 IN.) *	0 CM. (0 IN.) *
C4	0 CM. (0 IN.) *	0 CM. (0 IN.) *
C5	0 CM. (0 IN.) *	0 CM. (0 IN.) *
C6	0 CM. (0 IN.) *	0 CM. (0 IN.) *
D	0 CM. (0 IN.) *	0 CM. (0 IN.) *
D'	-56 CM. (-22 IN.) *	0 CM. (0 IN.) *

(* INDICATES DEFAULT VALUE)
PRESS ANY KEY TO CONTINUE

INPUT CALCULATE TRAJECTORY OUTPUT GRAPHICS EXIT

DIMENSIONS AND INERTIAL PROPERTIES

	VEHICLE #1	VEHICLE #2
CG TO FRONT AXLE	130 CM. (51 IN.)	127 CM. (50 IN.)
CG TO REAR AXLE	141 CM. (56 IN.)	127 CM. (50 IN.)
TRACK	150 CM. (59 IN.)	127 CM. (50 IN.)
CG TO FRONT OF VEH	228 CM. (90 IN.)	127 CM. (50 IN.)
CG TO REAR OF VEH	-270 CM. (-106 IN.)	-127 CM. (-50 IN.)
CG TO SIDE OF VEH	92 CM. (36 IN.)	127 CM. (50 IN.)
MOMENT OF INERTIA	14537 KGS (32048 LBS)	****** KGS (******* LBS)
VEHICLE MASS	4 KGS (10 LBS)	2600 KGS (5732 LBS)

PRESS ANY KEY TO CONTINUE

U.S. Department of Transportation
National Highway Traffic Safety Administration

CRASHPC PROGRAM SUMMARY

(All Measurements In Metric)

BEST AVAILABLE COPY

NATIONAL ACCIDENT SAMPLING SYSTEM
CRASHWORTHINESS DATA SYSTEM

Identifying Title

09	167A	02	[redacted] 96
Primary Sampling Unit	Case No.-Stratum	Accident Event Sequence No.	Date (Month, day, year) of Run

CRASHPC Vehicle Identification

	Year	Make	Model	NASS Veh. No.
Vehicle 1	1988	Hyundai	Excel	02
Vehicle 2		Pickup Truck		

GENERAL INFORMATION

	VEHICLE 1	VEHICLE 2
Size	1	11
Weight	978 + 80 + 0 = 1058 kg (Curb + Occupant(s) + Cargo)	____ + ____ + ____ = ____ kg (Curb + Occupant(s) + Cargo)
CDC	07BYLWZ	
PDOF (-180 to +180)	0150 °	± ____ °
Stiffness	____	11

SCENE INFORMATION

Rest and Impact Positions [ ] No, ***Go To Damage Information*** [ ] Yes

		VEHICLE 1	VEHICLE 2
Rest Position	X	____.____ m	____.____ m
	Y	____.____ m	____.____ m
	PSI	____ °	____ °
Impact Position	X	____.____ m	____.____ m
	Y	____.____ m	____.____ m
	PSI	____ °	____ °
Slip Angle(-180 to +180)		____ °	____ °

VEHICLE MOTION

Sustained Contact [ ] No [ ] Yes

	VEHICLE 1	VEHICLE 2
Vehicle Rotation	[ ] No [ ] Yes	[ ] No [ ] Yes
Rotation Stop Before Rest	[ ] No [ ] Yes	[ ] No [ ] Yes
End of Rotation Position X	____.____ m	____.____ m
End of Rotation Position Y	____.____ m	____.____ m
End of Rotation Position PSI	____ °	____ °
Curved Path	[ ] No [ ] Yes	[ ] No [ ] Yes
Point on Path	X ____.____ m Y ____.____ m	X ____.____ m Y ____.____ m
Rotation Direction	[ ] None [ ] CW [ ] CCW	[ ] None [ ] CW [ ] CCW
Rotation >360°	[ ] No [ ] Yes	[ ] No [ ] Yes

BEST AVAILABLE COPY

National Accident Sampling System-Crashworthiness Data System: CRASHPC Program Summary

FRICTION INFORMATION

Coefficient of Friction . ___ ___ ___

Rolling Resistance Option ___

Vehicle 1 Rolling Resistance

LF ___ . ___ ___ RF ___ . ___ ___

LR ___ . ___ ___ RR ___ . ___ ___

Vehicle 2 Rolling Resistance

LF ___ . ___ ___ RF ___ . ___ ___

LR ___ . ___ ___ RR ___ . ___ ___

TRAJECTORY INFORMATION

Trajectory Data [ ] No [ ] Yes

If No, Go To Damage Information

Vehicle 1 Steer Angles

LF ___ ___ ___ ° RF ___ ___ ___ °

LR ___ ___ ___ ° RR ___ ___ ___ °

Vehicle 2 Steer Angles

LF ___ ___ ___ ° RF ___ ___ ___ °

LR ___ ___ ___ ° RR ___ ___ ___ °

Terrain Boundary [ ] No [ ] Yes

First Point

X ___ ___ ___ . ___ m Y ___ ___ ___ . ___ m

Second Point

X ___ ___ ___ . ___ m Y ___ ___ ___ . ___ m

Secondary Coefficient of Friction . ___ ___ ___

DAMAGE INFORMATION

	VEHICLE 1		VEHICLE 2	
Damage Length	L	145 cm	L	___ ___ ___ cm
Crush Depths	C_1	013 cm	C_1	___ ___ ___ cm
	C_2	015 cm	C_2	___ ___ ___ cm
	C_3	013 cm	C_3	___ ___ ___ cm
	C_4	011 cm	C_4	___ ___ ___ cm
	C_5	007 cm	C_5	___ ___ ___ cm
	C_6	007 cm	C_6	___ ___ ___ cm
Damage Offset	D	± 027 cm	D	± ___ ___ ___ cm

IF THIS COMMON IMPACT WAS WITH A MOTOR VEHICLE *NOT IN TRANSPORT*, FILL IN THE INFORMATION BELOW.

Model Year: _____

Make: _____

Model: _____

VIN: _____

The Weight, CDC, Scene Data and Damage Information for this vehicle should be recorded above.

Complete and ATTACH the appropriate vehicle damage sketch and dimensions to the Form.

Printing Picture: CRASH

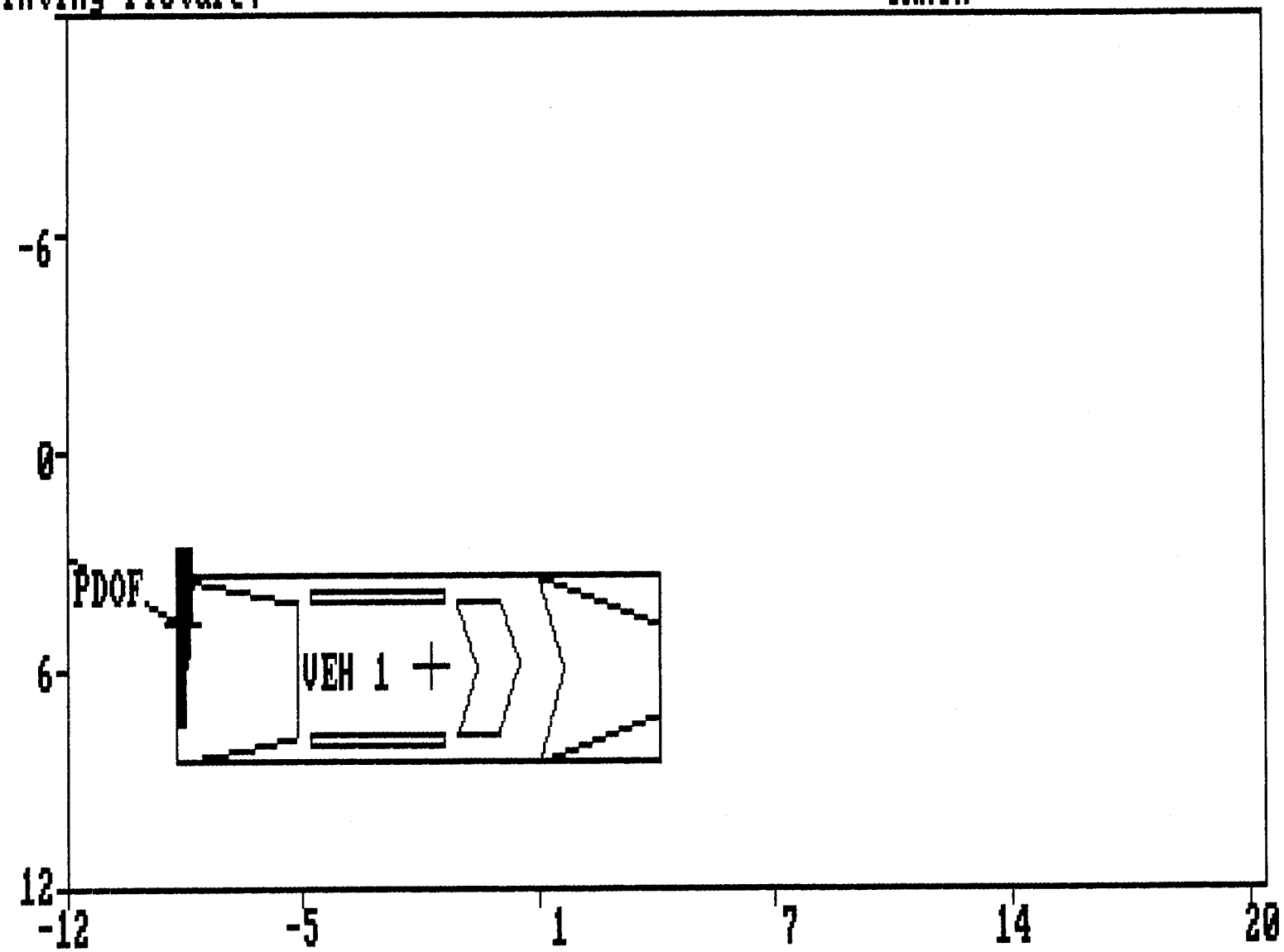

DAMAGE DESCRIPTION

INPUT CALCULATE TRAJECTORY OUTPUT GRAPHICS EXIT

SUMMARY OF CRASHPC RESULTS USING DAMAGE

167A Event 2 - V2 Barrier Test

	SPEED CHANGE (DAMAGE)
VEHICLE #1	
TOTAL	24 KPH (15 MPH)
LONGITUDINAL	21 KPH (13 MPH)
LATITUDINAL	12 KPH (7 MPH)
PDOF ANGLE	-150 DEGREES
ENERGY DISSIPATED =	32362 JOULES (23866 FT-LB)
VEHICLE #2	
TOTAL	0 KPH (0 MPH)
LONGITUDINAL	0 KPH (0 MPH)
LATITUDINAL	0 KPH (0 MPH)
PDOF ANGLE	0 DEGREES
ENERGY DISSIPATED =	0 JOULES (0 FT-LB)

PRESS ANY KEY TO CONTINUE

INPUT CALCULATE TRAJECTORY OUTPUT GRAPHICS EXIT

DAMAGE DATA

	VEHICLE #1	VEHICLE #2
SIZE CATEGORY	1	11
STIFFNESS CATEGORY	1	0
VEHICLE WEIGHT	1058 KGS (2332 LBS)	****** KGS (2204586 LBS) *
CDC	07BYLW2	BARRIER
PDOF ANGLE	-150 DEGREES	0 DEGREES *
CRUSH LENGTH	145 CM. (57 IN.)	0 CM. (0 IN.) *
C1	13 CM. (5 IN.)	0 CM. (0 IN.) *
C2	15 CM. (6 IN.)	0 CM. (0 IN.) *
C3	13 CM. (5 IN.)	0 CM. (0 IN.) *
C4	11 CM. (4 IN.)	0 CM. (0 IN.) *
C5	7 CM. (3 IN.)	0 CM. (0 IN.) *
C6	7 CM. (3 IN.)	0 CM. (0 IN.) *
D	-27 CM. (-11 IN.)	0 CM. (0 IN.) *
D'	-37 CM. (-15 IN.)	0 CM. (0 IN.) *

(* INDICATES DEFAULT VALUE)
PRESS ANY KEY TO CONTINUE

INPUT CALCULATE TRAJECTORY OUTPUT GRAPHICS EXIT

DIMENSIONS AND INERTIAL PROPERTIES

	VEHICLE #1	VEHICLE #2
CG TO FRONT AXLE	115 CM. (45 IN.)	127 CM. (50 IN.)
CG TO REAR AXLE	122 CM. (48 IN.)	127 CM. (50 IN.)
TRACK	130 CM. (51 IN.)	127 CM. (50 IN.)
CG TO FRONT OF VEH	193 CM. (76 IN.)	127 CM. (50 IN.)
CG TO REAR OF VEH	-213 CM. (-84 IN.)	-127 CM. (-50 IN.)
CG TO SIDE OF VEH	77 CM. (30 IN.)	127 CM. (50 IN.)
MOMENT OF INERTIA	5518 KGS (12166 LBS)	****** KGS (******* LBS)
VEHICLE MASS	3 KGS (6 LBS)	2600 KGS (5732 LBS)

PRESS ANY KEY TO CONTINUE

BEST AVAILABLE COPY

U.S. Department of Transportation
National Highway Traffic Safety Administration

CRASHPC PROGRAM SUMMARY

(All Measurements In Metric)

NATIONAL ACCIDENT SAMPLING SYSTEM
CRASHWORTHINESS DATA SYSTEM

Identifying Title

09	167A	02	[redacted] 96
Primary Sampling Unit	Case No.-Stratum	Accident Event Sequence No.	Date (Month, day, year) of Run

CRASHPC Vehicle Identification

	Year	Make	Model	NASS Veh. No.
Vehicle 1	1993	Infinity	J30T	01
Vehicle 2	CDC	Barrier T-51		

GENERAL INFORMATION

	VEHICLE 1	VEHICLE 2
Size	3	11
Weight	1600 (Curb) + 82 (Occupant(s)) + 0 (Cargo) = 1682 kg	____ (Curb) + ____ (Occupant(s)) + ____ (Cargo) = ____ kg
CDC	01FZEW1	
PDOF (-180 to +180)	030 °	± ____ °
Stiffness	3	11

SCENE INFORMATION

Rest and Impact Positions [ ] No, *Go To Damage Information* [ ] Yes

		VEHICLE 1	VEHICLE 2
Rest Position	X	____.____ m	____.____ m
	Y	____.____ m	____.____ m
	PSI	____ °	____ °
Impact Position	X	____.____ m	____.____ m
	Y	____.____ m	____.____ m
	PSI	____ °	____ °
Slip Angle(-180 to +180)		____ °	____ °

VEHICLE MOTION

Sustained Contact [ ] No [ ] Yes

	VEHICLE 1	VEHICLE 2
Vehicle Rotation	[ ] No [ ] Yes	[ ] No [ ] Yes
Rotation Stop Before Rest	[ ] No [ ] Yes	[ ] No [ ] Yes
End of Rotation Position	X ____.____ m	____.____ m
	Y ____.____ m	____.____ m
	PSI ____ °	____ °
Curved Path	[ ] No [ ] Yes	[ ] No [ ] Yes
Point on Path	X ____.____ m Y ____.____ m	X ____.____ m Y ____.____ m
Rotation Direction	[ ] None [ ] CW [ ] CCW	[ ] None [ ] CW [ ] CCW
Rotation >360°	[ ] No [ ] Yes	[ ] No [ ] Yes

BEST AVAILABLE COPY

FRICTION INFORMATION

Coefficient of Friction . ___ ___ ___

Rolling Resistance Option ___

Vehicle 1 Rolling Resistance

LF ___ . ___ ___ RF ___ . ___ ___

LR ___ . ___ ___ RR ___ . ___ ___

Vehicle 2 Rolling Resistance

LF ___ . ___ ___ RF ___ . ___ ___

LR ___ . ___ ___ RR ___ . ___ ___

TRAJECTORY INFORMATION

Trajectory Data [ ] No [ ] Yes

If No, Go To Damage Information

Vehicle 1 Steer Angles

LF ___ ___ ___ ° RF ___ ___ ___ °

LR ___ ___ ___ ° RR ___ ___ ___ °

Vehicle 2 Steer Angles

LF ___ ___ ___ ° RF ___ ___ ___ °

LR ___ ___ ___ ° RR ___ ___ ___ °

Terrain Boundary [ ] No [ ] Yes

First Point

X ___ ___ ___ . ___ m Y ___ ___ ___ . ___ m

Second Point

X ___ ___ ___ . ___ m Y ___ ___ ___ . ___ m

Secondary Coefficient of Friction .___ ___ ___

DAMAGE INFORMATION

	VEHICLE 1		VEHICLE 2	
Damage Length	L	___ ___ ___ cm	L	___ ___ ___ cm
Crush Depths	C_1	___ ___ ___ cm	C_1	___ ___ ___ cm
	C_2	___ ___ ___ cm	C_2	___ ___ ___ cm
	C_3	___ ___ ___ cm	C_3	___ ___ ___ cm
	C_4	___ ___ ___ cm	C_4	___ ___ ___ cm
	C_5	___ ___ ___ cm	C_5	___ ___ ___ cm
	C_6	___ ___ ___ cm	C_6	___ ___ ___ cm
Damage Offset	D $\pm$	___ ___ ___ cm	D $\pm$	___ ___ ___ cm

IF THIS COMMON IMPACT WAS WITH A MOTOR VEHICLE *NOT IN TRANSPORT*, FILL IN THE INFORMATION BELOW.

Model Year: _____

Make: _____

Model: _____

VIN: _____

The Weight, CDC, Scene Data and Damage Information for this vehicle should be recorded above.

Complete and ATTACH the appropriate vehicle damage sketch and dimensions to the Form.

Printing Picture: CRASH

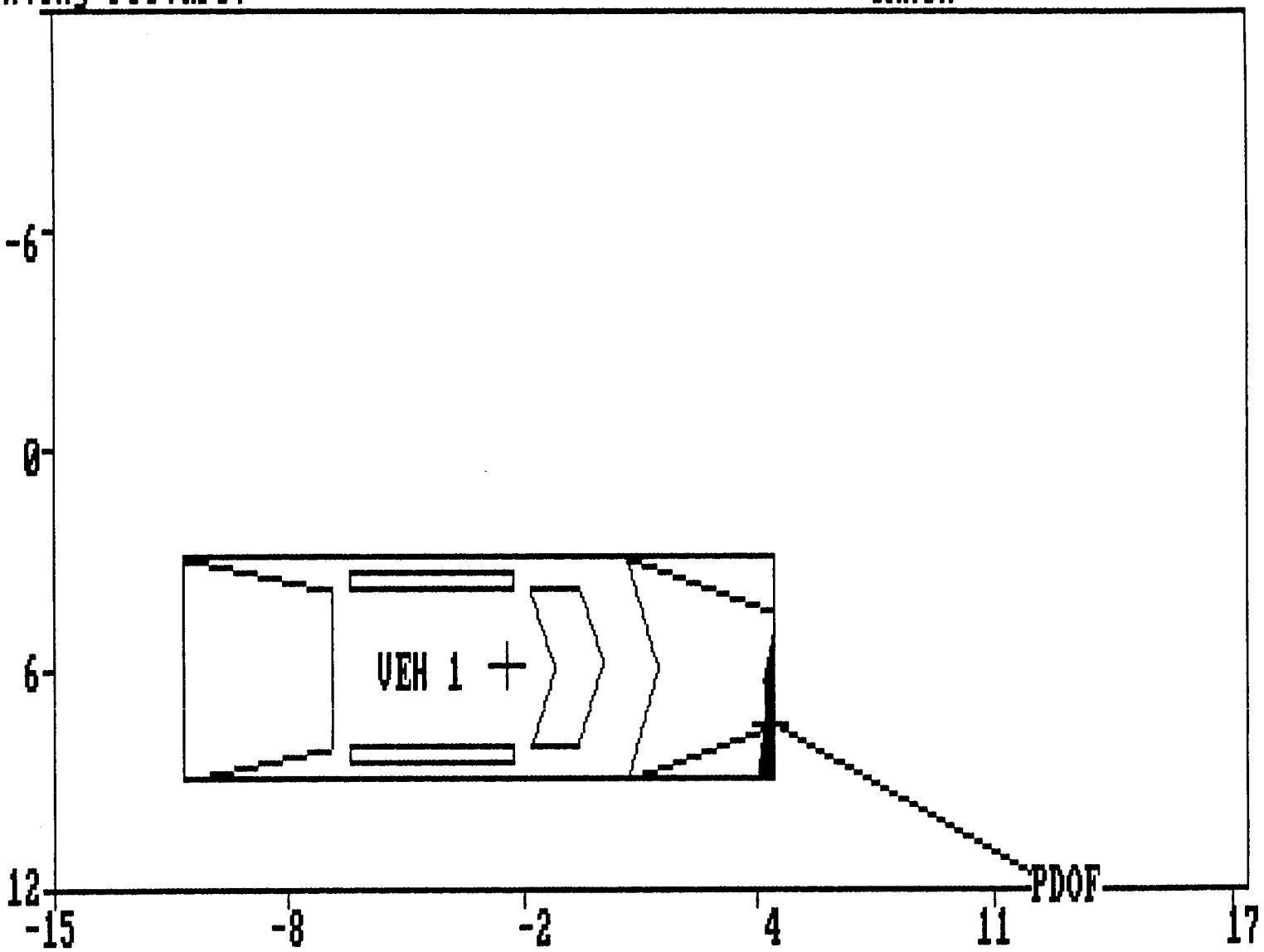

DAMAGE DESCRIPTION

INPUT CALCULATE TRAJECTORY OUTPUT GRAPHICS EXIT

SUMMARY OF CRASHPC RESULTS USING DAMAGE

167A Event 2 - V1 CDC Only

	SPEED CHANGE (DAMAGE)
VEHICLE #1	
TOTAL	14 KPH (8 MPH)
LONGITUDINAL	-12 KPH (-7 MPH)
LATITUDINAL	-7 KPH (-4 MPH)
PDOF ANGLE	30 DEGREES
ENERGY DISSIPATED =	14878 JOULES (10972 FT-LB)
VEHICLE #2	
TOTAL	0 KPH (0 MPH)
LONGITUDINAL	0 KPH (0 MPH)
LATITUDINAL	0 KPH (0 MPH)
PDOF ANGLE	0 DEGREES
ENERGY DISSIPATED =	0 JOULES (0 FT-LB)

PRESS ANY KEY TO CONTINUE

INPUT CALCULATE TRAJECTORY OUTPUT GRAPHICS EXIT

DAMAGE DATA

	VEHICLE #1	VEHICLE #2
SIZE CATEGORY	3	11
STIFFNESS CATEGORY	3	0
VEHICLE WEIGHT	1682 KGS (3708 LBS)	****** KGS (2204586 LBS) *
CDC	01FZEW1	BARRIER
PDOF ANGLE	30 DEGREES	0 DEGREES *
CRUSH LENGTH	0 CM. (0 IN.) *	0 CM. (0 IN.) *
C1	0 CM. (0 IN.) *	0 CM. (0 IN.) *
C2	0 CM. (0 IN.) *	0 CM. (0 IN.) *
C3	0 CM. (0 IN.) *	0 CM. (0 IN.) *
C4	0 CM. (0 IN.) *	0 CM. (0 IN.) *
C5	0 CM. (0 IN.) *	0 CM. (0 IN.) *
C6	0 CM. (0 IN.) *	0 CM. (0 IN.) *
D	0 CM. (0 IN.) *	0 CM. (0 IN.) *
D'	46 CM. (18 IN.) *	0 CM. (0 IN.) *

(* INDICATES DEFAULT VALUE)
PRESS ANY KEY TO CONTINUE

INPUT CALCULATE TRAJECTORY OUTPUT GRAPHICS EXIT

DIMENSIONS AND INERTIAL PROPERTIES

	VEHICLE #1	VEHICLE #2
CG TO FRONT AXLE	130 CM. (51 IN.)	127 CM. (50 IN.)
CG TO REAR AXLE	141 CM. (56 IN.)	127 CM. (50 IN.)
TRACK	150 CM. (59 IN.)	127 CM. (50 IN.)
CG TO FRONT OF VEH	228 CM. (90 IN.)	127 CM. (50 IN.)
CG TO REAR OF VEH	-270 CM. (-106 IN.)	-127 CM. (-50 IN.)
CG TO SIDE OF VEH	92 CM. (36 IN.)	127 CM. (50 IN.)
MOMENT OF INERTIA	14537 KGS (32048 LBS)	****** KGS (******* LBS)
VEHICLE MASS	4 KGS (10 LBS)	2600 KGS (5732 LBS)

PRESS ANY KEY TO CONTINUE

U.S. Department of Transportation
National Highway Traffic Safety Administration

CRASHPC PROGRAM SUMMARY

(All Measurements In Metric)

BEST AVAILABLE COPY

NATIONAL ACCIDENT SAMPLING SYSTEM
CRASHWORTHINESS DATA SYSTEM

Identifying Title

09	167A	03	[redacted] 96
Primary Sampling Unit	Case No.-Stratum	Accident Event Sequence No.	Date (Month, day, year) of Run

CRASHPC Vehicle Identification

	Year	Make	Model	NASS Veh. No.
Vehicle 1	1988	Hyundai	Excel	02
Vehicle 2		Barrier Test		

GENERAL INFORMATION

	VEHICLE 1	VEHICLE 2
Size	1	11
Weight	978 (Curb) + 80 (Occupant(s)) + 0 (Cargo) = 1058 kg	____ (Curb) + ____ (Occupant(s)) + ____ (Cargo) = ____ kg
CDC	08LFMN1	
PDOF (-180 to +180)	0120 °	± ____ °
Stiffness		11

SCENE INFORMATION

Rest and Impact Positions [ ] No, *Go To Damage Information* [ ] Yes

		VEHICLE 1	VEHICLE 2
Rest Position	X	____.__ m	____.__ m
	Y	____.__ m	____.__ m
	PSI	___ °	___ °
Impact Position	X	____.__ m	____.__ m
	Y	____.__ m	____.__ m
	PSI	___ °	___ °
Slip Angle(-180 to +180)		___ °	___ °

VEHICLE MOTION

Sustained Contact [ ] No [ ] Yes

		VEHICLE 1	VEHICLE 2
Vehicle Rotation		[ ] No [ ] Yes	[ ] No [ ] Yes
Rotation Stop Before Rest		[ ] No [ ] Yes	[ ] No [ ] Yes
End of Rotation Position	X	____.__ m	____.__ m
	Y	____.__ m	____.__ m
	PSI	___ °	___ °
Curved Path		[ ] No [ ] Yes	[ ] No [ ] Yes
Point on Path	X	____.__ m	____.__ m
	Y	____.__ m	____.__ m
Rotation Direction		[ ] None [ ] CW [ ] CCW	[ ] None [ ] CW [ ] CCW
Rotation >360°		[ ] No [ ] Yes	[ ] No [ ] Yes

BEST AVAILABLE COPY

FRICTION INFORMATION

Coefficient of Friction ___ ___ ___

Rolling Resistance Option ___

Vehicle 1 Rolling Resistance

LF ___ . ___ ___ RF ___ . ___ ___

LR ___ . ___ ___ RR ___ . ___ ___

Vehicle 2 Rolling Resistance

LF ___ . ___ ___ RF ___ . ___ ___

LR ___ . ___ ___ RR ___ . ___ ___

TRAJECTORY INFORMATION

Trajectory Data [ ] **No** [ ] **Yes**

If No, Go To Damage Information

Vehicle 1 Steer Angles

LF ___ ___ ___ ° RF ___ ___ ___ °

LR ___ ___ ___ ° RR ___ ___ ___ °

Vehicle 2 Steer Angles

LF ___ ___ ___ ° RF ___ ___ ___ °

LR ___ ___ ___ ° RR ___ ___ ___ °

Terrain Boundary [ ] **No** [ ] **Yes**

First Point

X ___ ___ ___ . ___ m Y ___ ___ ___ . ___ m

Second Point

X ___ ___ ___ . ___ m Y ___ ___ ___ . ___ m

Secondary Coefficient of Friction . ___ ___ ___

DAMAGE INFORMATION

	VEHICLE 1		VEHICLE 2	
Damage Length	L	082 cm	L	___ ___ ___ cm
Crush Depths	C_1	001 cm	C_1	___ ___ ___ cm
	C_2	001 cm	C_2	___ ___ ___ cm
	C_3	002 cm	C_3	___ ___ ___ cm
	C_4	003 cm	C_4	___ ___ ___ cm
	C_5	003 cm	C_5	___ ___ ___ cm
	C_6	000 cm	C_6	___ ___ ___ cm
Damage Offset	D	0 127 cm	D	± ___ ___ ___ cm

IF THIS COMMON IMPACT WAS WITH A MOTOR VEHICLE *NOT IN TRANSPORT*, FILL IN THE INFORMATION BELOW.

Model Year: _____

Make: _____

Model: _____

VIN: _____

The Weight, CDC, Scene Data and Damage Information for this vehicle should be recorded above.

Complete and ATTACH the appropriate vehicle damage sketch and dimensions to the Form.

Printing Picture:

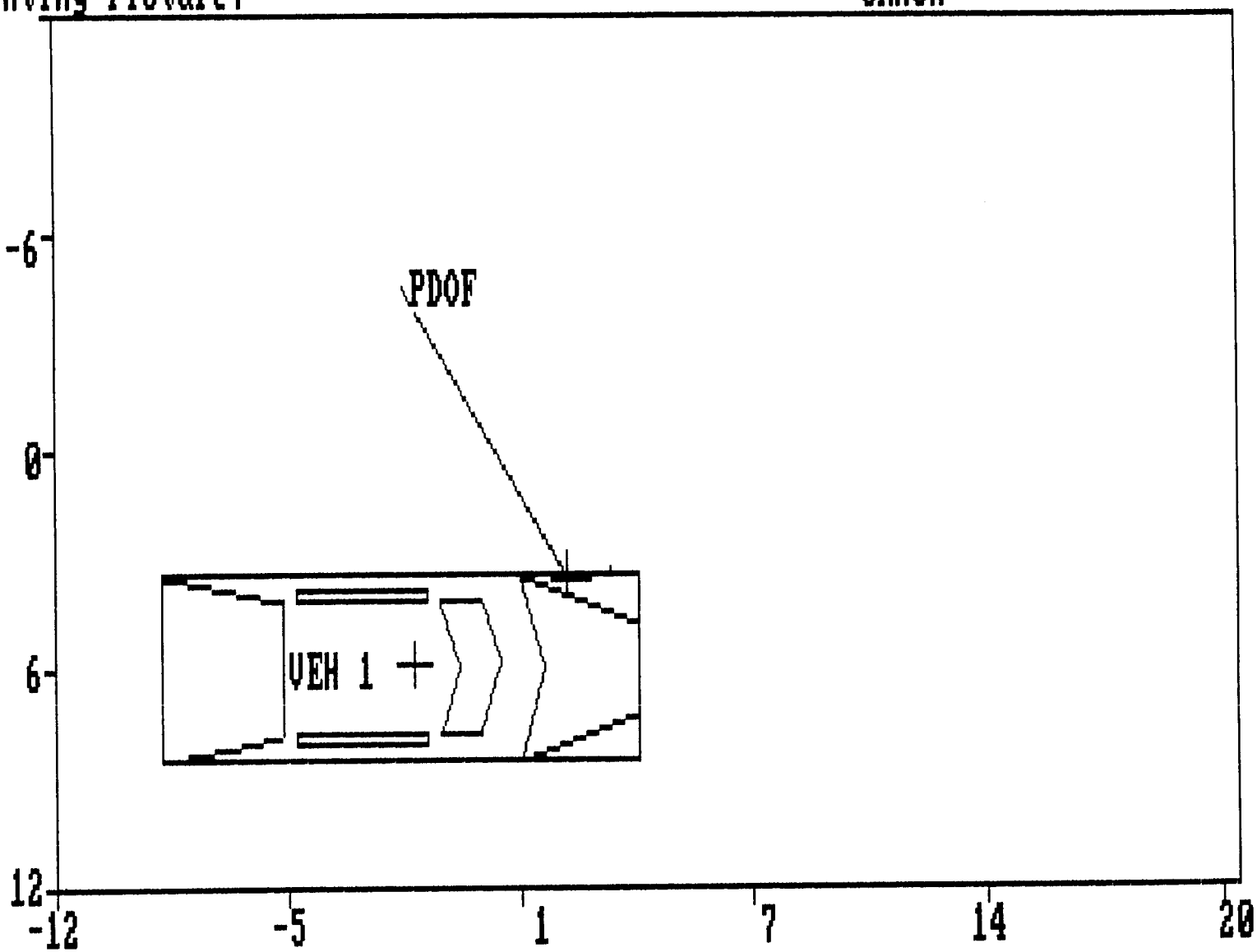

DAMAGE DESCRIPTION

INPUT CALCULATE TRAJECTORY OUTPUT GRAPHICS EXIT

SUMMARY OF CRASHPC RESULTS USING DAMAGE

167A Event 3 - V2 Barrier Test

	SPEED CHANGE (DAMAGE)
VEHICLE #1	
TOTAL	3 KPH (2 MPH)
LONGITUDINAL	1 KPH (1 MPH)
LATITUDINAL	2 KPH (1 MPH)
PDOF ANGLE	-120 DEGREES
ENERGY DISSIPATED =	736 JOULES (543 FT-LB)
VEHICLE #2	
TOTAL	0 KPH (0 MPH)
LONGITUDINAL	0 KPH (0 MPH)
LATITUDINAL	0 KPH (0 MPH)
PDOF ANGLE	0 DEGREES
ENERGY DISSIPATED =	0 JOULES (0 FT-LB)

PRESS ANY KEY TO CONTINUE

INPUT CALCULATE TRAJECTORY OUTPUT GRAPHICS EXIT

DAMAGE DATA

	VEHICLE #1	VEHICLE #2
SIZE CATEGORY	1	11
STIFFNESS CATEGORY	1	0
VEHICLE WEIGHT	1058 KGS (2332 LBS)	****** KGS (2204586 LBS) *
CDC	08LFMN1	BARRIER
PDOF ANGLE	-120 DEGREES	0 DEGREES *
CRUSH LENGTH	82 CM. (32 IN.)	0 CM. (0 IN.) *
C1	1 CM. (0 IN.)	0 CM. (0 IN.) *
C2	1 CM. (0 IN.)	0 CM. (0 IN.) *
C3	2 CM. (1 IN.)	0 CM. (0 IN.) *
C4	3 CM. (1 IN.)	0 CM. (0 IN.) *
C5	3 CM. (1 IN.)	0 CM. (0 IN.) *
C6	0 CM. (0 IN.)	0 CM. (0 IN.) *
D	127 CM. (50 IN.)	0 CM. (0 IN.) *
D'	131 CM. (52 IN.)	0 CM. (0 IN.) *

(* INDICATES DEFAULT VALUE)
PRESS ANY KEY TO CONTINUE

INPUT CALCULATE TRAJECTORY OUTPUT GRAPHICS EXIT

DIMENSIONS AND INERTIAL PROPERTIES

	VEHICLE #1	VEHICLE #2
CG TO FRONT AXLE	115 CM. (45 IN.)	127 CM. (50 IN.)
CG TO REAR AXLE	122 CM. (48 IN.)	127 CM. (50 IN.)
TRACK	130 CM. (51 IN.)	127 CM. (50 IN.)
CG TO FRONT OF VEH	193 CM. (76 IN.)	127 CM. (50 IN.)
CG TO REAR OF VEH	-213 CM. (-84 IN.)	-127 CM. (-50 IN.)
CG TO SIDE OF VEH	77 CM. (30 IN.)	127 CM. (50 IN.)
MOMENT OF INERTIA	5518 KGS (12166 LBS)	****** KGS (******* LBS)
VEHICLE MASS	3 KGS (6 LBS)	2600 KGS (5732 LBS)

PRESS ANY KEY TO CONTINUE

U.S. Department of Transportation
National Highway Traffic Safety Administration

SMASH PROGRAM SUMMARY

(All Measurements In Metric)

NATIONAL ACCIDENT SAMPLING SYSTEM
CRASHWORTHINESS DATA SYSTEM

Identifying Title

09	167A	03	[redacted]
Primary Sampling Unit	Case No.-Stratum	Accident Event Sequence No.	Date (Month, day, year) of Run

GENERAL INFORMATION

	VEHICLE 1	VEHICLE 2
NASS Vehicle Number	01	02
Year	1993	1988
Make	Infinity	Hyundai
Model	J30T	Excel
Body Style	4S	3H
CDC	Missing	08LFMN1
PDOF	±	±180°
Heading Angle	±165°	±180°

VEHICLE SPECIFICATIONS

	VEHICLE 1	VEHICLE 2
Wheelbase	276 cm	238 cm
Overall Length	486 cm	409 cm
Overall Width	177 cm	160 cm
Weight	1600 + 82 + 0 = 1682 kg	978 + 80 + 0 = 1058 kg
	Curb / Occupant(s) / Cargo	Curb / Occupant(s) / Cargo
Engine Displacement	3.0 L	1.5 L
Drive System	FWD	FWD
Size	3	1
Stiffness	3	1

DAMAGE INFORMATION

	VEHICLE 1	VEHICLE 2
Damage Known?	N	Y
Damage Length	cm	082 cm
Damage Offset	± cm	±127 cm
Crush Depth: C1	cm	001 cm
C2	cm	001 cm
C3	cm	002 cm
C4	cm	003 cm
C5	cm	003 cm
C6	cm	000 cm

BEST AVAILABLE COPY

SCENE INFORMATION

Rest and Impact Positions [ ] No [ ] Yes

		VEHICLE 1	VEHICLE 2
Rest Position	X	___ ___ ___ ___ m	___ ___ ___ . ___ m
	Y	___ ___ ___ ___ m	___ ___ ___ . ___ m
	Heading Angle	___ ___ ___ °	___ ___ ___ °
Impact Position	X	___ ___ ___ ___ m	___ ___ ___ . ___ m
	Y	___ ___ ___ . ___ m	___ ___ ___ . ___ m
	Heading Angle	___ ___ ___ °	___ ___ ___ °
Slip Angle (-180 to +180)		___ ___ ___ °	___ ___ ___ °

VEHICLE MOTION

	VEHICLE 1	VEHICLE 2
Sustained Contact	[ ] No [ ] Yes	[ ] No [ ] Yes
Vehicle Rotation	[ ] No [ ] Yes	[ ] No [ ] Yes
Rotation Stop Before Rest	[ ] No [ ] Yes	[ ] No [ ] Yes
End of Rotation Position X	___ ___ ___ ___ m	___ ___ ___ . ___ m
Y	___ ___ ___ ___ m	___ ___ ___ . ___ m
Heading Angle	___ ___ ___ °	___ ___ ___ °
Curved Path	[ ] No [ ] Yes	[ ] No [ ] Yes
Point on Path X	___ ___ ___ . ___ m	___ ___ ___ . ___ m
Point on Path Y	___ ___ ___ ___ m	___ ___ ___ . ___ m
Rotation Direction	[ ] None [ ] CW [ ] CCW	[ ] None [ ] CW [ ] CCW
Rotation >360°	[ ] No [ ] Yes	[ ] No [ ] Yes

FRICTION INFORMATION

Coefficient of Friction ___ ___

Rolling Resistance Option 1

Vehicle 1 Rolling Resistance		Vehicle 2 Rolling Resistance	
LF	___ . ___ ___	LF	___ . ___ ___
RF	___ . ___ ___	RF	___ . ___ ___
LR	___ . ___ ___	LR	___ . ___ ___
RR	___ . ___ ___	RR	___ . ___ ___

IF THIS COMMON IMPACT WAS WITH A CDS VEHICLE *NOT IN TRANSPORT*, FILL IN THE INFORMATION BELOW.

Model Year: _____

Make: _____

Model: _____

VIN: _____

The Weight, CDC, Scene Data and Damage Information for this vehicle should be recorded above.

Complete and ATTACH the appropriate damage sketch and dimensions to the form.

Summary of Results Using Damage

09 167a 03

	Speed Change (ROLDMISS)	
Vehicle #1		
Total	3 km/h	(2 mph)
Longitudinal	-1 km/h	(-1 mph)
Latitudinal	-3 km/h	(-2 mph)
PDOF Angle	75 °	
Energy Dissipated	= 950 Joules	(700 Ft-Lb)
Barrier Equivalent Speed	= 3.8 km/h	(2.3 mph)
Calculated using size and stiffness categories.		
Vehicle #2		
Total	5 km/h	(3 mph)
Longitudinal	3 km/h	(3 mph)
Latitudinal	4 km/h	(3 mph)
PDOF Angle	-120 °	
Energy Dissipated	= 2400 Joules	(1770 Ft-Lb)
Barrier Equivalent Speed	= 4.8 km/h	(3.0 mph)
Calculated using size and stiffness categories.		

<Continue>

1988 hyundai Excel

1993 infinity J30T

Vehicle number 1 is missing.

U.S. Department of Transportation
National Highway Traffic Safety Administration

SMASH PROGRAM SUMMARY

(All Measurements In Metric)

NATIONAL ACCIDENT SAMPLING SYSTEM
CRASHWORTHINESS DATA SYSTEM

Identifying Title

09	167A	02	[redacted]
Primary Sampling Unit	Case No.-Stratum	Accident Event Sequence No.	Date (Month, day, year) of Run

GENERAL INFORMATION

	VEHICLE 1	VEHICLE 2
NASS Vehicle Number	01	02
Year	1993	1988
Make	Infinity	Hyundai
Model	J30T	Excel
Body Style	4S	06 3H
CDC	~~01FZEW1~~ MISSING	07BYLW2
PDOF	~~0030~~ ± 030	~~150~~ ± 180
Heading Angle	± 160 °	± 180 °

VEHICLE SPECIFICATIONS

	VEHICLE 1	VEHICLE 2
Wheelbase	276 cm	238 cm
Overall Length	486 cm	409 cm
Overall Width	172 cm	160 cm
Weight	1600 + 82 + 0 = 1682 kg	978 + 80 + 0 = 1058 kg
	Curb Occupant(s) Cargo	Curb Occupant(s) Cargo
Engine Displacement	3.0 L	1.5 L
Drive System	FWD	FWD
Size	3	1
Stiffness	3	1

DAMAGE INFORMATION

	VEHICLE 1	VEHICLE 2
Damage Known?	N	Y
Damage Length	___ cm	145 cm
Damage Offset	± ___ cm	± 027 cm
Crush Depth: C1	___ cm	013 cm
C2	___ cm	015 cm
C3	___ cm	013 cm
C4	___ cm	011 cm
C5	___ cm	007 cm
C6	___ cm	007 cm

BEST AVAILABLE COPY

SCENE INFORMATION

Rest and Impact Positions [ ] No [ ] Yes

	VEHICLE 1		VEHICLE 2	
Rest Position	X	___ ___ ___ . ___ m	X	___ ___ ___ . ___ m
	Y	___ ___ ___ . ___ m	Y	___ ___ ___ . ___ m
	Heading Angle	___ ___ ___ °	Heading Angle	___ ___ ___ °
Impact Position	X	___ ___ ___ . ___ m	X	___ ___ ___ . ___ m
	Y	___ ___ ___ . ___ m	Y	___ ___ ___ . ___ m
	Heading Angle	___ ___ ___ °	Heading Angle	___ ___ ___ °
Slip Angle (-180 to +180)		___ ___ ___ °		___ ___ ___ °

VEHICLE MOTION

	VEHICLE 1	VEHICLE 2
Sustained Contact	[ ] No [ ] Yes	[ ] No [ ] Yes
Vehicle Rotation	[ ] No [ ] Yes	[ ] No [ ] Yes
Rotation Stop Before Rest	[ ] No [ ] Yes	[ ] No [ ] Yes
End of Rotation Position	X ___ ___ ___ . ___ m	X ___ ___ ___ . ___ m
	Y ___ ___ ___ . ___ m	Y ___ ___ ___ . ___ m
	Heading Angle ___ ___ ___ °	Heading Angle ___ ___ ___ °
Curved Path	[ ] No [ ] Yes	[ ] No [ ] Yes
Point on Path	X ___ ___ ___ . ___ m Y ___ ___ ___ . ___ m	X ___ ___ ___ . ___ m Y ___ ___ ___ . ___ m
Rotation Direction	[ ] None [ ] CW [ ] CCW	[ ] None [ ] CW [ ] CCW
Rotation >360°	[ ] No [ ] Yes	[ ] No [ ] Yes

FRICTION INFORMATION

Coefficient of Friction ___ ___

Rolling Resistance Option 1

Vehicle 1 Rolling Resistance		Vehicle 2 Rolling Resistance	
LF	___ . ___ ___	LF	___ . ___ ___
RF	___ . ___ ___	RF	___ . ___ ___
LR	___ . ___ ___	LR	___ . ___ ___
RR	___ . ___ ___	RR	___ . ___ ___

IF THIS COMMON IMPACT WAS WITH A CDS VEHICLE *NOT IN TRANSPORT*, FILL IN THE INFORMATION BELOW.

Model Year: _____

Make: _____

Model: _____

VIN: _____

The Weight, CDC, Scene Data and Damage Information for this vehicle should be recorded above.

Complete and ATTACH the appropriate damage sketch and dimensions to the form.

09 167a 03
[redacted]1996

File Edit Calculate Reports Graphics Options Help

Summary of Results Using Damage

09 167a

	Speed Change (ROLDMISS)	
Vehicle #1		
Total	12 km/h	(7 mph)
Longitudinal	-11 km/h	(-7 mph)
Latitudinal	4 km/h	(3 mph)
PDOF Angle	-20 °	
Energy Dissipated	= 9852 Joules	(7266 Ft-Lb)
Barrier Equivalent Speed	= 10.8 km/h	(6.7 mph)
Calculated using size and stiffness categories.		
Vehicle #2		
Total	19 km/h	(12 mph)
Longitudinal	19 km/h	(12 mph)
Latitudinal	0 km/h	(0 mph)
PDOF Angle	-180 °	
Energy Dissipated	= 17541 Joules	(12936 Ft-Lb)
Barrier Equivalent Speed	= 19.8 km/h	(12.3 mph)
Calculated using size and stiffness categories.		

<Continue>

1988 hundai excel

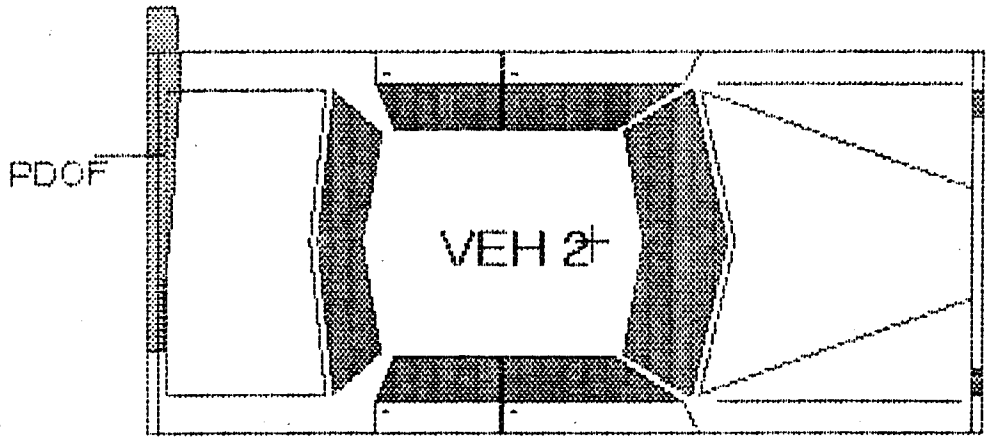

1993 Infinity J30T

Vehicle number 1 is missing.

09 167a 1996

```
09167A00000011[redacted]958.0500000000000217500000003[redacted]96010191000
0022360000227870 6 0402
09167A00010012[redacted]958.0510000000000103F54000
09167A00020012[redacted]958.0510000000000103F0201B
09167A00030012[redacted]958.0510000000000103R0201L
09167A01000021       8.05 0000000009358034O4JNKAY21DXPM[redacted]019990890230[redacted]21
25122130009901129994l0
09167A01000022       8.05 0000000001010116016000000000000000998998000119999 999 99
9999999999099922
09167A01000031       8.05 000000000015412FLEE05020299999999
                              1400302761500100030909090900l000
09167A01000041       8.05 0000000000011111000000122222301222213021111111012111110
09167A01000042       8.05 000000000110512
             250000010302120
09167A01010051       8.05 0000000003011830931119000000400002000004211001999011 99
6210101221130116231000000000000041000620101080008011011
09167A01010161       8.05 000000000165020636205320O
09167A01010261       8.05 000000000129740212205320O
09167A01010361       8.05 000000000129020217205310O
09167A01010461       8.05 000000000129040217205310O
09167A01010561       8.05 000000000119040215205310O
09167A01010661       8.05 000000000125080029004310O
09167A01010761       8.05 000000000125140618004310O
09167A01010861       8.05 000000000114062033205320O
09167A02000021       8.05 0000000008855032O3KMHLD21J9JU[redacted]019990890960O[redacted]91
25122130009901609991 98
09167A02000022       8.05 000000000101010000980000000000000001802000000301 9+019 00
00175998102003
09167A02000031       8.05 000000000020106BYLW02030108LFMN011450130150130110070O7-
02708200100100200300300O+12714509623813601000201070101001000
09167A02000041       8.05 000000000063100100000122222001422210011161100111111100
09167A02000042       8.05 000000000
             100000013000010
09167A02010051       8.05 000000000401999999111900000940000100000400000000000 00
00000000000302162230000000000000000009900000000000001001
09167A00000066       8.05 000000000TWO VEHICLE, FATAL
09167A00000171       8.05 000000000Vehicles one and two were traveling south on a
 five lane divided highway in
09167A00000271       8.05 000000000lanes 5 and 3 respectively.  Vehicle one depar
ted the left roadside for
09167A00000371       8.05 000000000unknown reasons and struck a concrete bridge a
butment on it's front plane.
09167A00000471       8.05 000000000V1 then went across two lanes and struck the b
ack and left side of V2.  Both
09167A00000571       8.05 000000000vehicles were towed due to damage.  The driver
 of V1 was killed.  The driver
09167A00000671       8.05 000000000of V2 was not reported as injured.

09167A00000181       8.05 000000000001 Intermediate   1993 Infinity J30 T  Front
    Severe      None
09167A00000281       8.05 000000000002 Subcompact     1988 Hyundai Excel   Back
    Severe      L/F Seat Back
09167A00000381       8.05 000000000
             Folding Locks
09167A00000481       8.05 000000000
             Failed
09167A00000191       8.05 00000000001 Driver   L-Front    Air Bag Only neck     f
racture    3 roof
09167A00000291       8.05 00000000002 Driver   L-Front    None Used    not injure
d
```

```
09167A9999999900000000000000000000000000000000000200000000000000000000000000000000
0000000000001
```

GENERAL VEHICLE Vehicle: 1

INTRA ERRORS

GG0181 2 If REPORTED ALCOHOL PRESENCE GV13 equals 0, then ALCOHOL TEST
GG0182 GV14 should not equal 05-49.

GG0191 2 If ALCOHOL TEST GV14 equals 05-49, then REPORTED ALCOHOL
GG0192 PRESENCE GV13 should equal 1.

INTER ERRORS

AG0031 2 If ACCIDENT TYPE GV36 equals 01-16, then VEHICLE FORMS AC03
AG0032 should equal 01. GV=01

PSU09 ERROR SUMMARY SCREEN [redacted]/96
CASE 167A
CURRENT VERSION: 8.05

FORM NAME	NUMBER OF DOLLAR SIGNS	NUMBER OF LEVEL 1 ERRORS	NUMBER OF LEVEL 2 ERRORS	VERSION NUMBER CONSISTENT
Accident	0	0	0	Y
General Vehicle	0	0	2	Y
Vehicle Exterior	0	0	0	Y
Vehicle Interior	0	0	0	Y
Occupant Assessment	0	0	0	Y
Occupant Injury	0	0	0	Y
Total Inter Errors		0	1	
Total Case Errors	0	0	3	

U.S. Department of Transportation
National Highway Traffic Safety Administration

SLIDE INDEX

NATIONAL ACCIDENT SAMPLING SYSTEM
CRASHWORTHINESS DATA SYSTEM

Primary Sampling Unit Number 09 Case Number—Stratum 167A

Slide No.	Vehicle No.	Direction of Picture	Description of Slide Subject Matter
1-5	1	S	Approach
6	1	S	Impact with bridg abutment
7	1	S	Impact with VD
8	1	S	Final Rest
9	1	N	Look Back
10-15	1	S	Approach
16	1	S	At Impact
17	1	N	Look Back
18-28	1	—	Exterior
29-30	1	—	Close Up of impact 1+2
31-45	1	—	Interior
46-52	1	—	Air Bags
53-58	1	—	Occupant Contact Points
59-80	2	—	Exterior
81-98	2	—	Interior

HS Form 434B (1/95)

Slide No.	Vehicle No.	Direction of Picture	Description of Slide Subject Matter

PSU 09-167A (1995) #1

PSU 09-167A (1995) #2

PSU 09-167A (1995) #3

PSU 09-167A (1995) #4

PSU 09-167A (1995) #5

PSU 09-167A (1995) #6

PSU 09-167A (1995) #7

PSU 09-167A (1995) #8

PSU 09-167A (1995) #9

PSU 09-167A (1995) #10

PSU 09-167A (1995) #11

PSU 09-167A (1995) #12

PSU 09-167A (1995) #13

PSU 09-167A (1995) #14

PSU 09-167A (1995) #15

PSU 09-167A (1995) #16
Best Available

PSU 09-167A (1995) #17

PSU 09-167A (1995) #18

PSU 09-167A (1995) #19

PSU 09-167A (1995) #20

PSU 09-167A (1995) #21

PSU 09-167A (1995) #22

PSU 09-167A (1995) #23

PSU 09-167A (1995) #24

PSU 09-167A (1995) #25

PSU 09-167A (1995) #26

PSU 09-167A (1995) #27

PSU 09-167A (1995) #28

PSU 09-167A (1995) #29

PSU 09-167A (1995) #30

PSU 09-167A (1995) #31

PSU 09-167A (1995) #32
Best Available

PSU 09-167A (1995) #33
Best Available

PSU 09-167A (1995) #34
Best Available

PSU 09-167A (1995) #35
Best Available

PSU 09-167A (1995) #36
Best Available

PSU 09-167A (1995) #37
Best Available

PSU 09-167A (1995) #38

PSU 09-167A (1995) #39

PSU 09-167A (1995) #40
Best Available

PSU 09-167A (1995) #41
Best Available

PSU 09-167A (1995) #42
Best Available

PSU 09-167A (1995) #43

PSU 09-167A (1995) #44

PSU 09-167A (1995) #45

PSU 09-167A (1995) #46
Best Available

PSU 09-167A (1995) #47
Best Available

PSU 09-167A (1995) #48
Best Available

PSU 09-167A (1995) #49

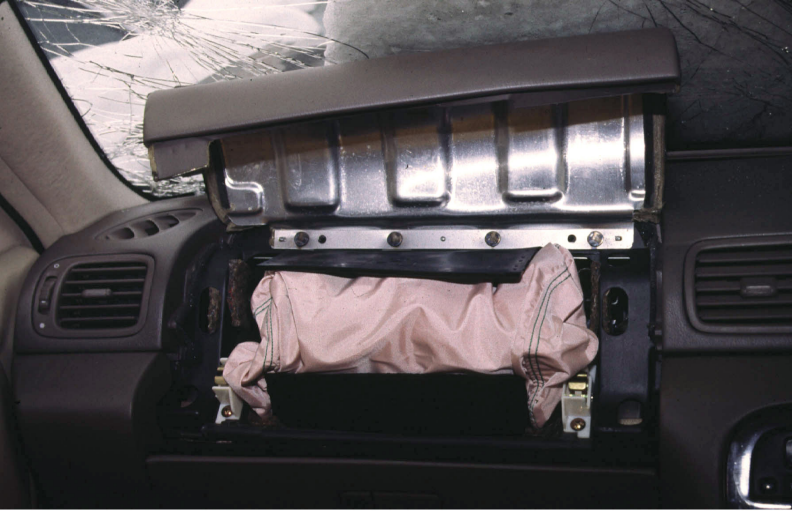

PSU 09-167A (1995) #50
Best Available

PSU 09-167A (1995) #51

PSU 09-167A (1995) #52

PSU 09-167A (1995) #53
Best Available

PSU 09-167A (1995) #54
Best Available

PSU 09-167A (1995) #55
Best Available

PSU 09-167A (1995) #56
Best Available

PSU 09-167A (1995) #57
Best Available

PSU 09-167A (1995) #58
Best Available

PSU 09-167A (1995) #59
Best Available

PSU 09-167A (1995) #60
Best Available

PSU 09-167A (1995) #61
Best Available

PSU 09-167A (1995) #62
Best Available

PSU 09-167A (1995) #63
Best Available

PSU 09-167A (1995) #64
Best Available

PSU 09-167A (1995) #65
Best Available

PSU 09-167A (1995) #66
Best Available

PSU 09-167A (1995) #67
Best Available

PSU 09-167A (1995) #68
Best Available

PSU 09-167A (1995) #69
Best Available

PSU 09-167A (1995) #70
Best Available

PSU 09-167A (1995) #71
Best Available

PSU 09-167A (1995) #72
Best Available

PSU 09-167A (1995) #73
Best Available

PSU 09-167A (1995) #74

PSU 09-167A (1995) #75

PSU 09-167A (1995) #76

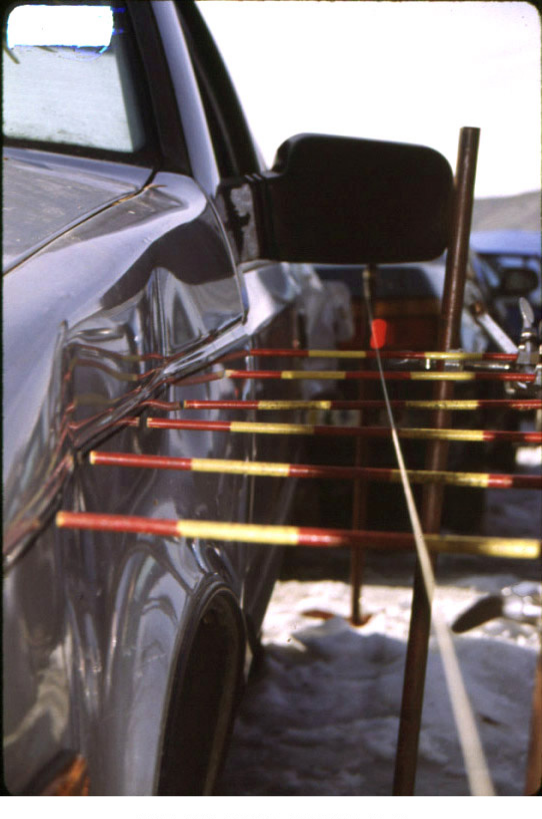

PSU 09-167A (1995) #77

PSU 09-167A (1995) #78

PSU 09-167A (1995) #79

PSU 09-167A (1995) #80

PSU 09-167A (1995) #81

PSU 09-167A (1995) #82

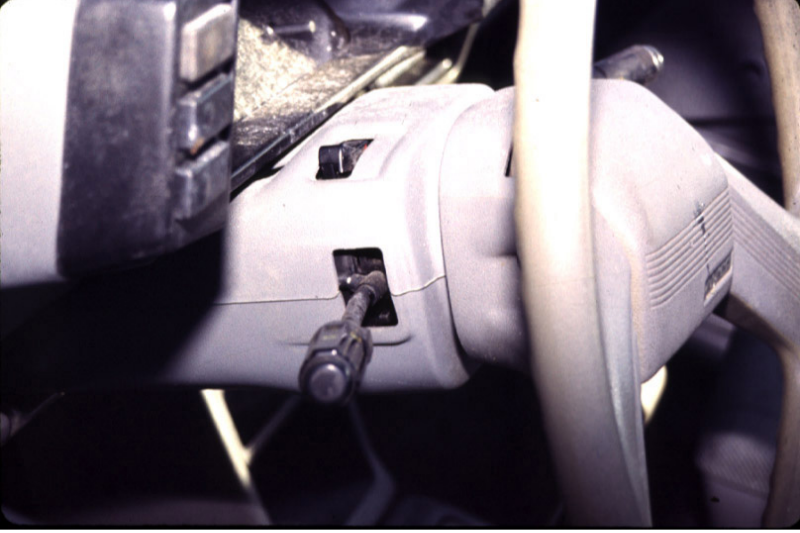

PSU 09-167A (1995) #83

PSU 09-167A (1995) #84

PSU 09-167A (1995) #85

PSU 09-167A (1995) #86

PSU 09-167A (1995) #87

PSU 09-167A (1995) #88

PSU 09-167A (1995) #89

PSU 09-167A (1995) #90

PSU 09-167A (1995) #91

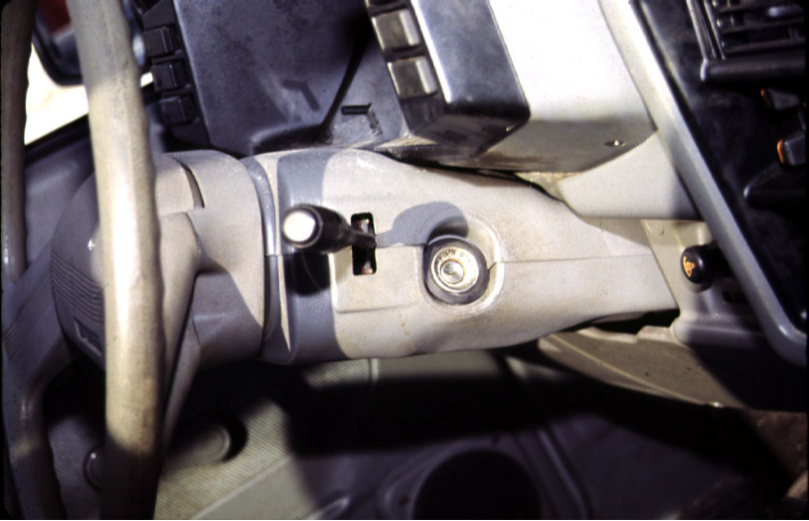

PSU 09-167A (1995) #92

PSU 09-167A (1995) #93

PSU 09-167A (1995) #94

PSU 09-167A (1995) #95

PSU 09-167A (1995) #96

PSU 09-167A (1995) #97
Best Available

PSU 09-167A (1995) #98